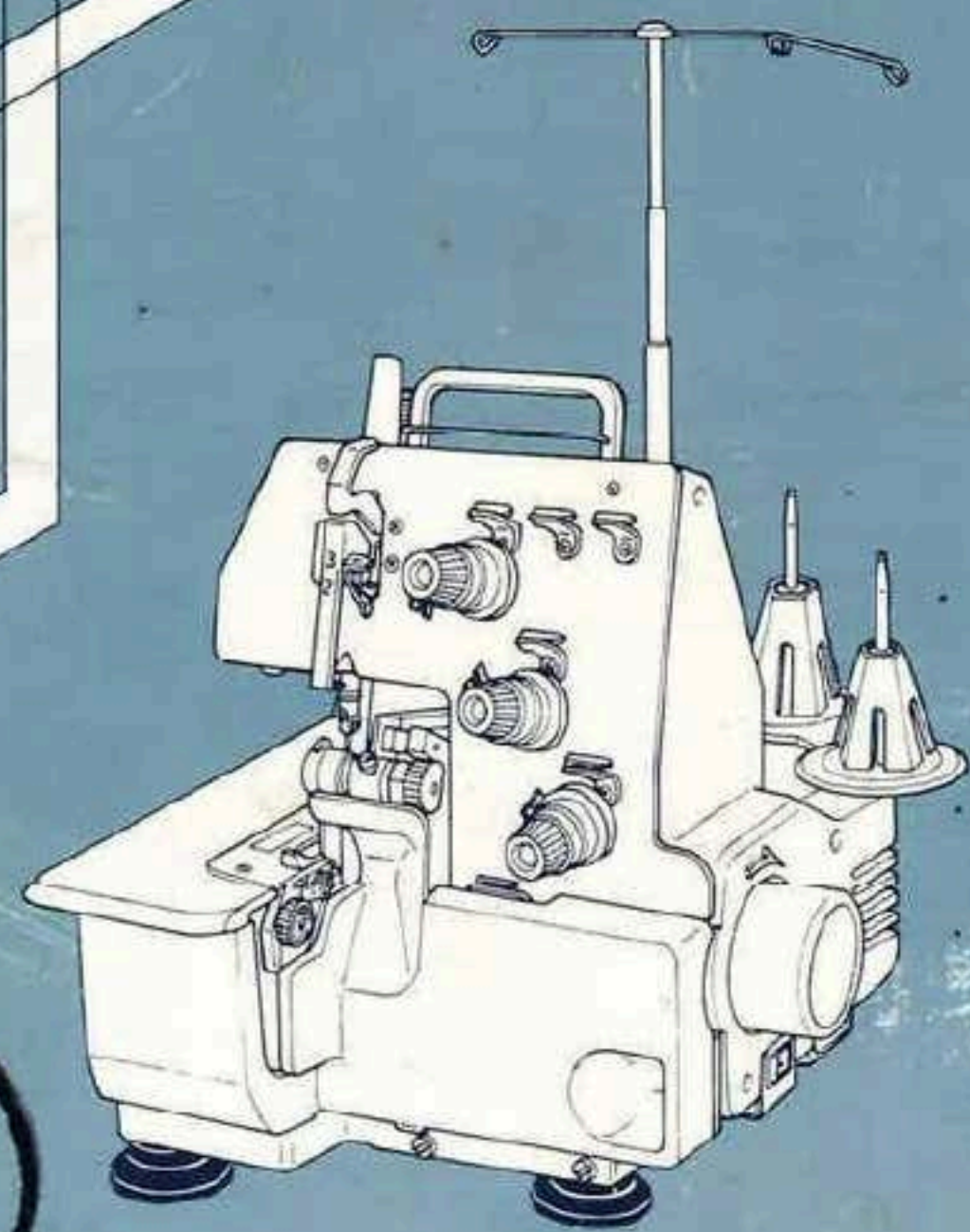

baby lock

Overlock Sewing Machine
MODEL BL3-418
INSTRUCTION BOOKLET

MACHINE PARTS DESCRIPTION PAGE

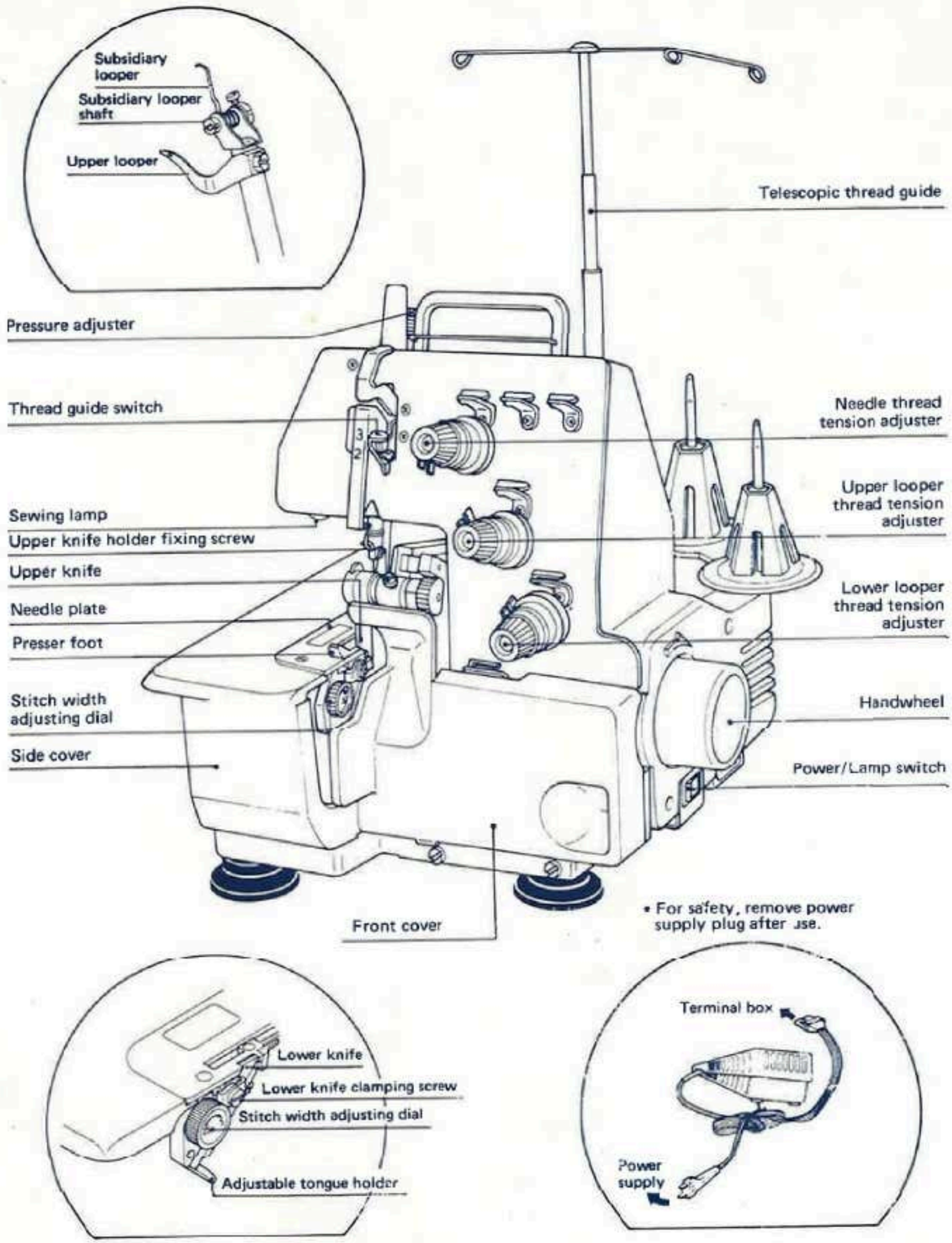

CONTENTS

1. Preparation for sewing 1
   - 1-1 Prior to threading 1
   - 1-2 Power/Lamp Switch 1
   - 1-3 Placement of thread 1
2. Threading machine 2
   - 2-1 Changing threads by tying on 2
   - 2-2 Threading machine ..... 3~4
3. Available settings 5
4. Standard machine settings check list 5
5. Stitch length adjustment 6
6. Stitch width adjustment 7
7. Tension adjustments for 3-thread seams 8
8. Narrow rolled hemming 9
9. Tension adjustments for narrow rolled hemming 10
10. Switching from narrow rolled hemming to 3-thread seaming 11
11. Switching from 3-thread seaming to 2-thread overedging 12
12. Tension adjustments for 2-thread overedging 13
13. Switching from 2-thread overedging to 3-thread seaming 14
14. Changing needles 15
15. Knives 16
    - 15-1 Disengaging the upper knife 16
    - 15-2 Locking the knife to sew extra heavy fabrics 16
16. Replacing the knives 17
    - 16-1 Replacing the upper knife 17
    - 16-2 Replacing the lower knife 17
17. Oiling of machine 18
18. Presser foot adjustment 19
19. Replacing the lamp 19
20. Checking and adjustment 20
21. Specification and packing list 20

1 PREPARATION FOR SEWING

1-1 Prior to threading

Pull the telescopic thread guide to its highest position. Then turn it to set at correct direction by the stoppers.

Pull the front cover to the right and then downward.
Push the side cover to the left to open.

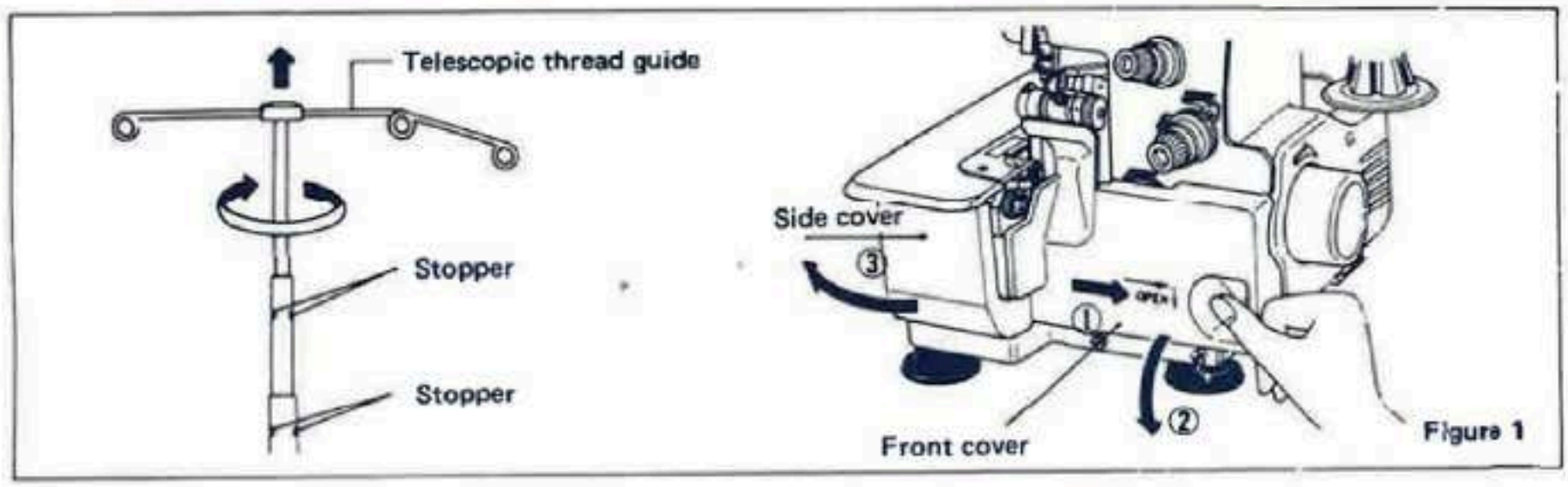

Figure 1

1-2 Power/Lamp Switch

Your Machine will not operate unless the Power/Lamp Switch is turned on. This same switch controls both the Machine Power and Sewing Lamp. When leaving your machine, the Machine must be switched off or the Plug removed from the terminal box. When replacing the Knives, Needle and Lamp, the Machine MUST BE DISCONNECTED FROM THE POWER SUPPLY.

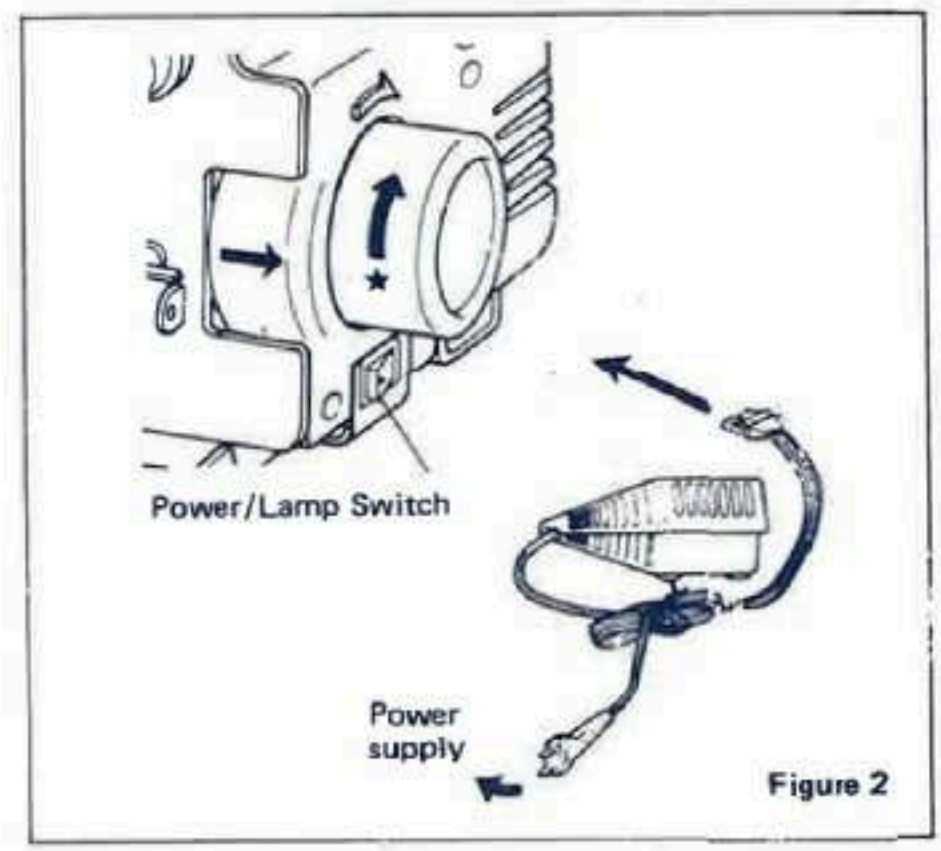

Figure 2

1-3 Placement of thread

Cone thread will normally be used for this machine. Bobbin thread can also be used when held by bobbin supporter (accessory), as shown in Figure 3.

Fit Baby net (accessory) to cover spool when you use synthetic thread on cone.

Figure 3

2 THREADING MACHINE

The machine is pre-adjusted for 3-thread overedging and be set with three trial threads. When changing the thread, you can thread machine by tying on new threads to existing threads in machine. Each time you thread machines, use one of the following methods.

2-1 Changing threads by tying on

Begin by cutting thread (to be changed) near the spool and tie the new thread to the thread in the machine (Figure 4). Run the machine, (presser foot down) holding chain-thread with left hand, guiding thread to rear of machine as they pass through tension disc and thread guides. As the knots come to the thread tension discs, separate the discs with your fingers to allow the knots to pass easily.

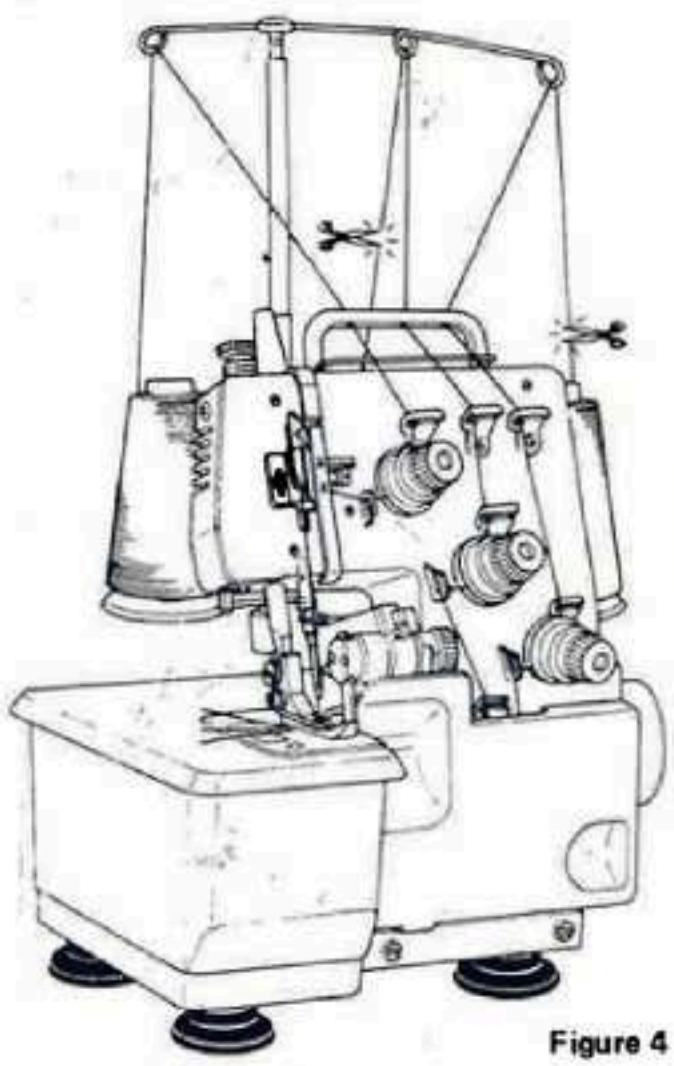

Figure 4

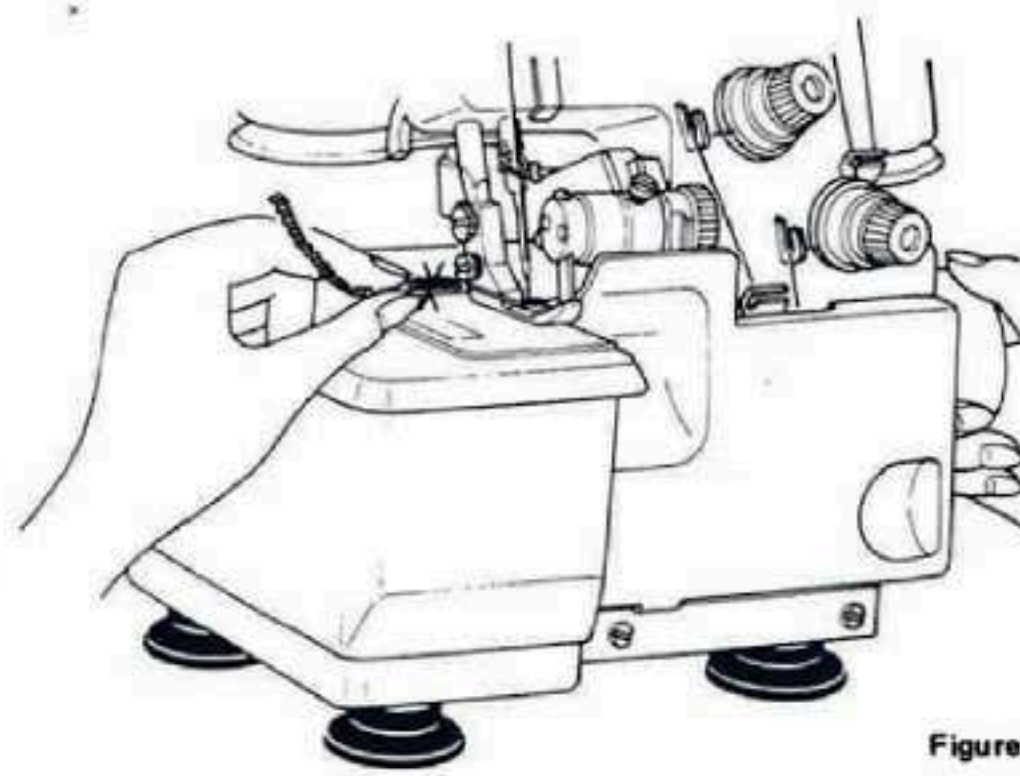

Figure 5

Caution:

Cut the thread knot before it passes through the eye of the needle and rethread from front to back, thus preventing possible bending of needle (Figure 6).

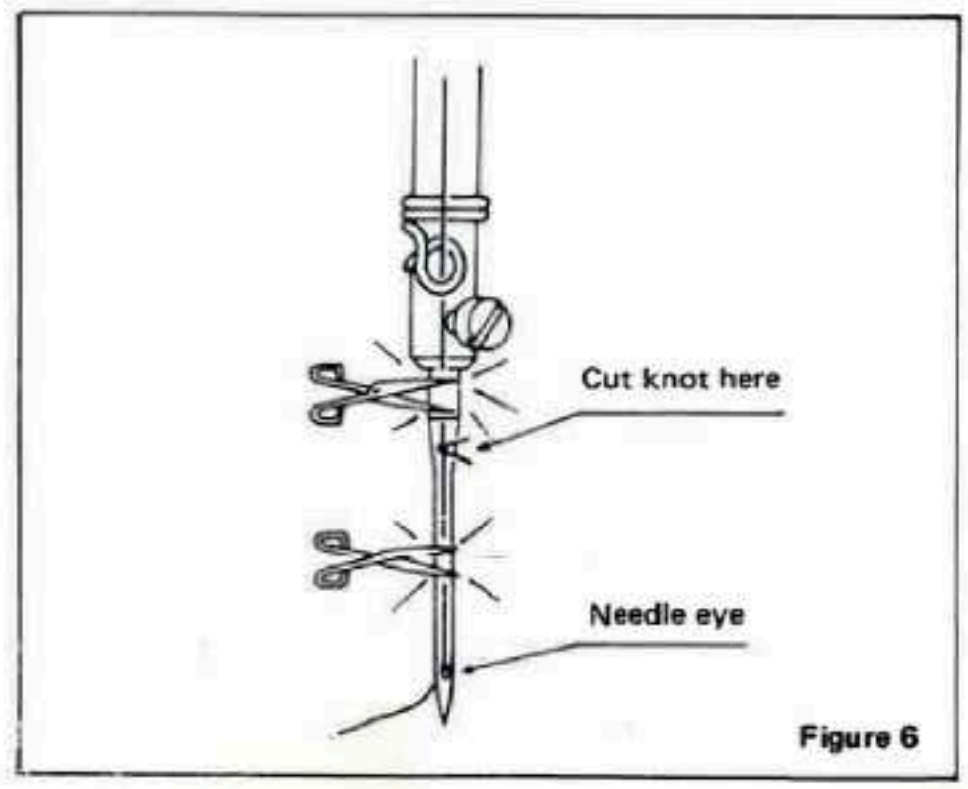

Figure 6

2-2 Threading machine

Improper threading will result in several problems such as skipped stitches and breaking threads etc.

Threading the machine should be done in the following sequence.

FIRST	:	Yellow guides and upper (back) looper
SECOND	:	Green guides and lower (front) looper
THIRD	:	Orange guides and needle

You will find a threading illustration when you open the side cover and to help in threading, tweezers will be found in the accessory box.

- **Threading looper**

1. Open front cover. Thread upper looper according to yellow guides in the order (1) to (12) as shown Figures 7 & 8. Draw thread back under rear of presser foot, leaving about 10 cm of thread.

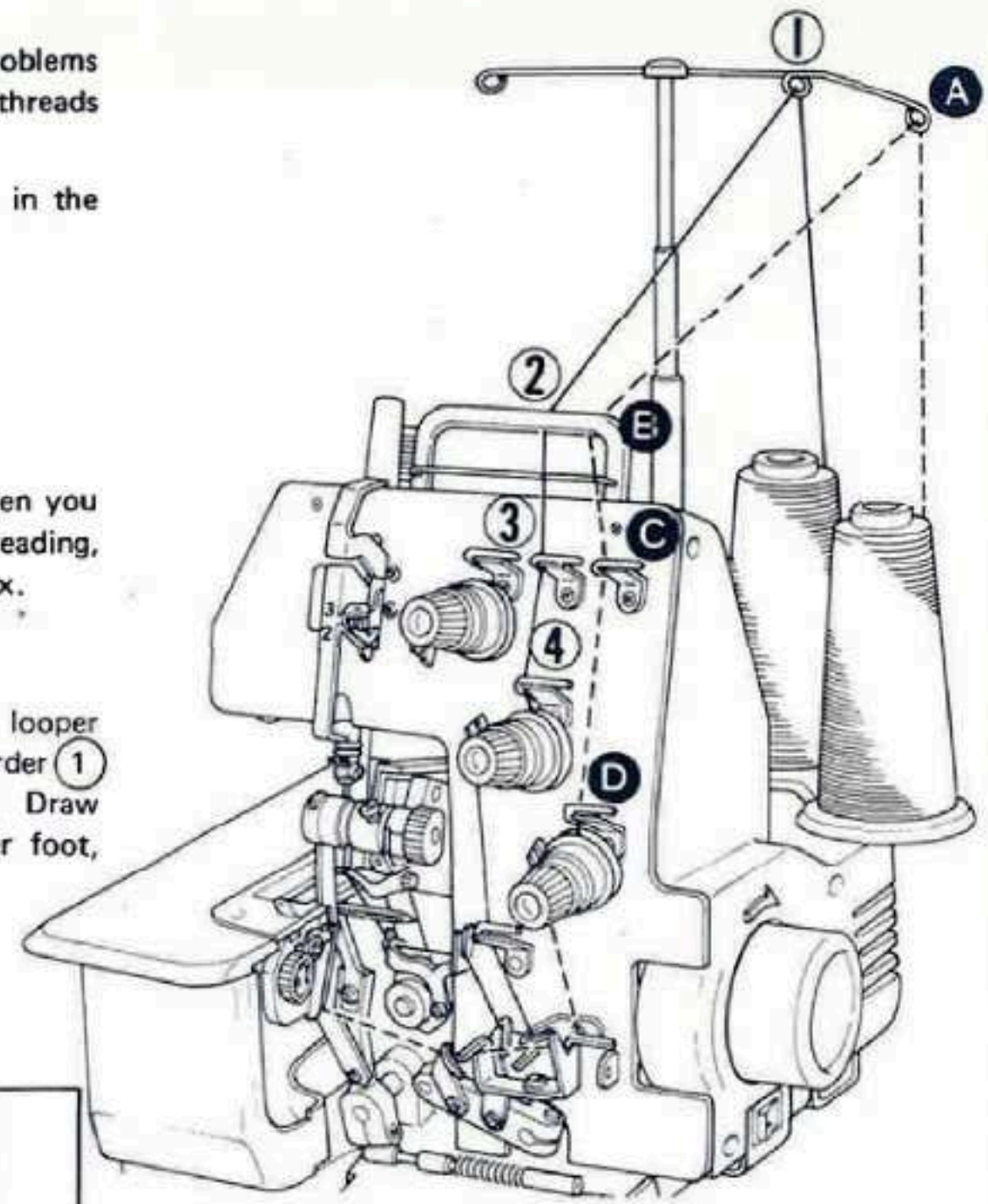

Figure 7

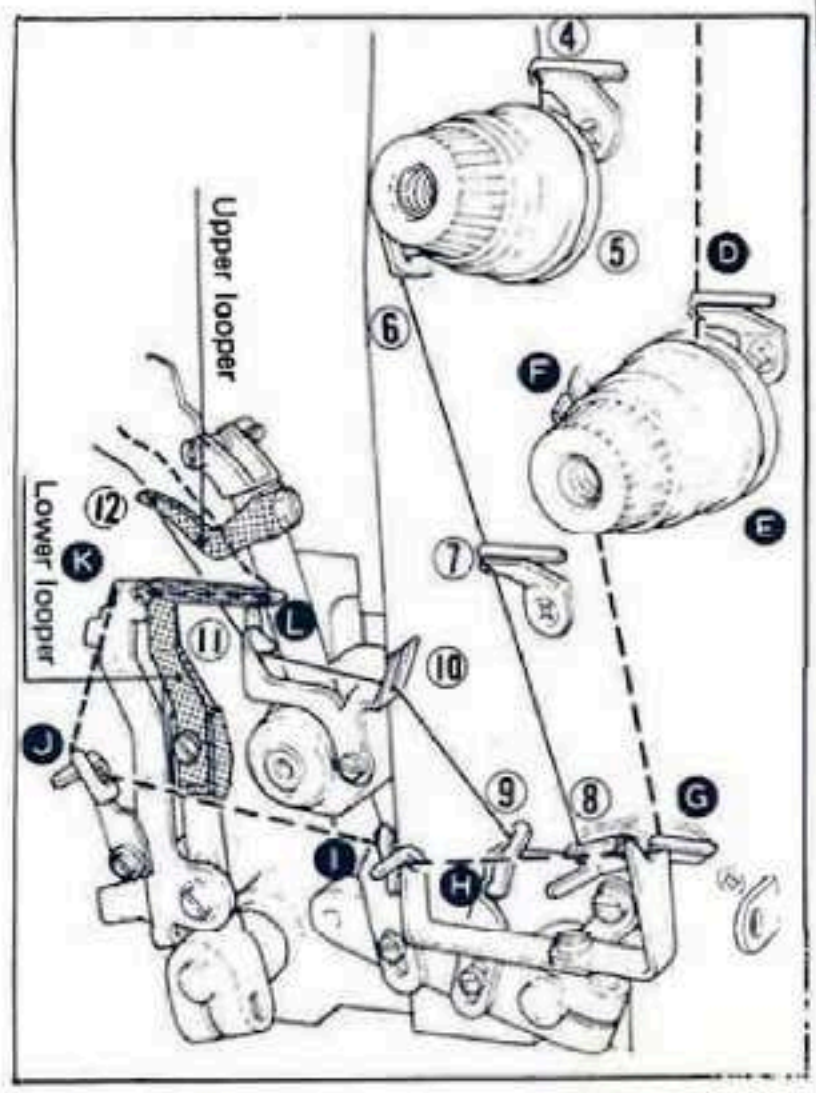

Figure 8

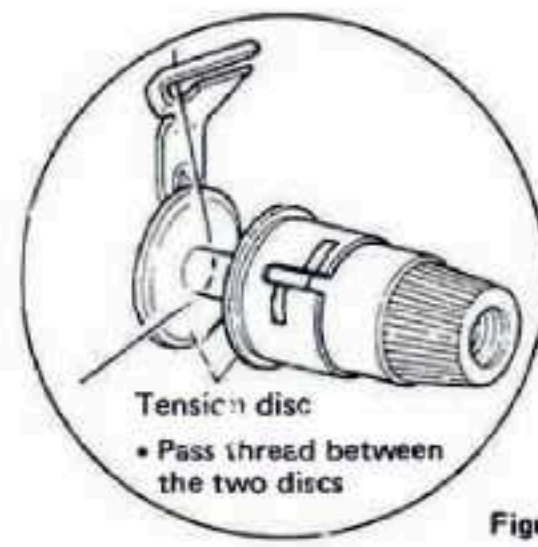

Figure 9

2. Open side cover. Thread lower looper according to green guides in the order Ⓐ to Ⓛ as shown Figures 7 & 8.
Thread Ⓙ, Ⓚ in the following order.

- Turn the handwheel clockwise to bring the lower looper to the far left.
- Press red bar to drop thread guide (Figure 10).
- Hook thread over guide Ⓙ, Ⓚ (Figure 11).
- Click guide back into position (Figure 12).
- Bring the lower looper to far right by turning the handwheel.
- Thread lower looper eye and pass thread over upper looper (See Figure 8) and under rear of presser foot, leaving about 10 cm of thread.

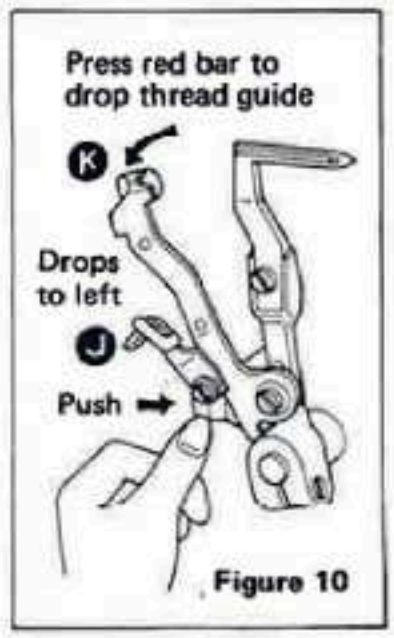

Figure 10

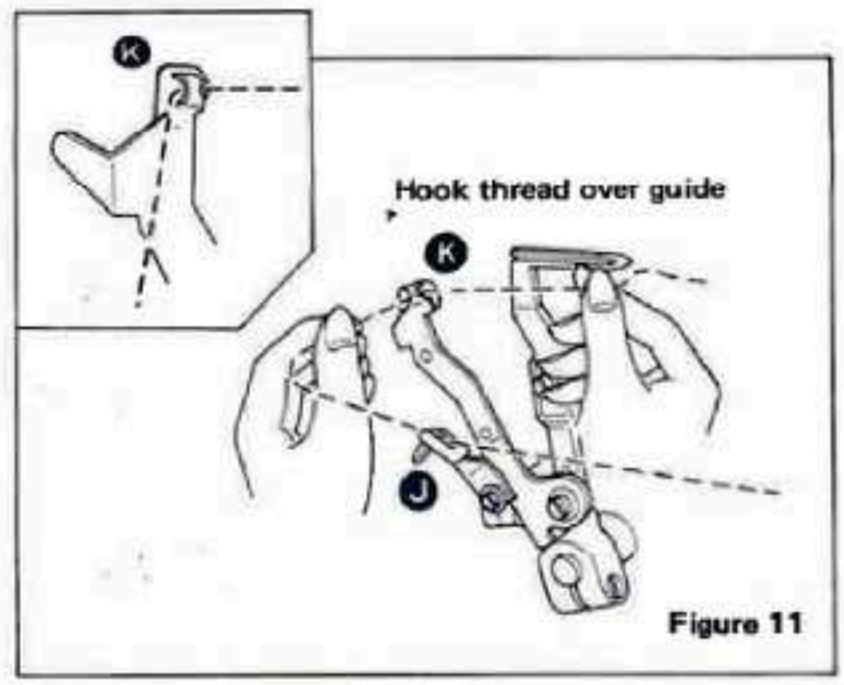

Figure 11

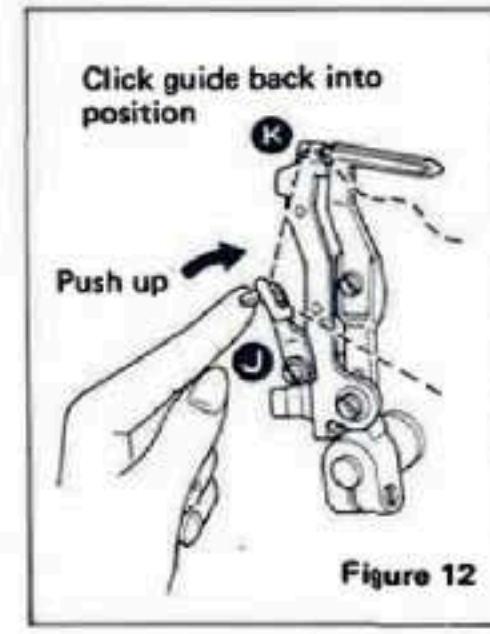

Figure 12

- **Thread needle**

  Thread needle according to orange guides in the order (a) to (i) as shown Figure 13.
  Finally, thread needle from FRONT to BACK and then under the presser foot, leaving about 10 cm of thread.

- **Testing stitch**

  After threading is completed, test for the threads to 'chain', turning the handwheel a few times with your hand without any material.
  Then set a spare piece of the fabric you propose using and start sewing. After you reach the end of the fabric, make about 5 cm chain-thread beyond the end of the fabric and trim off with scissors.

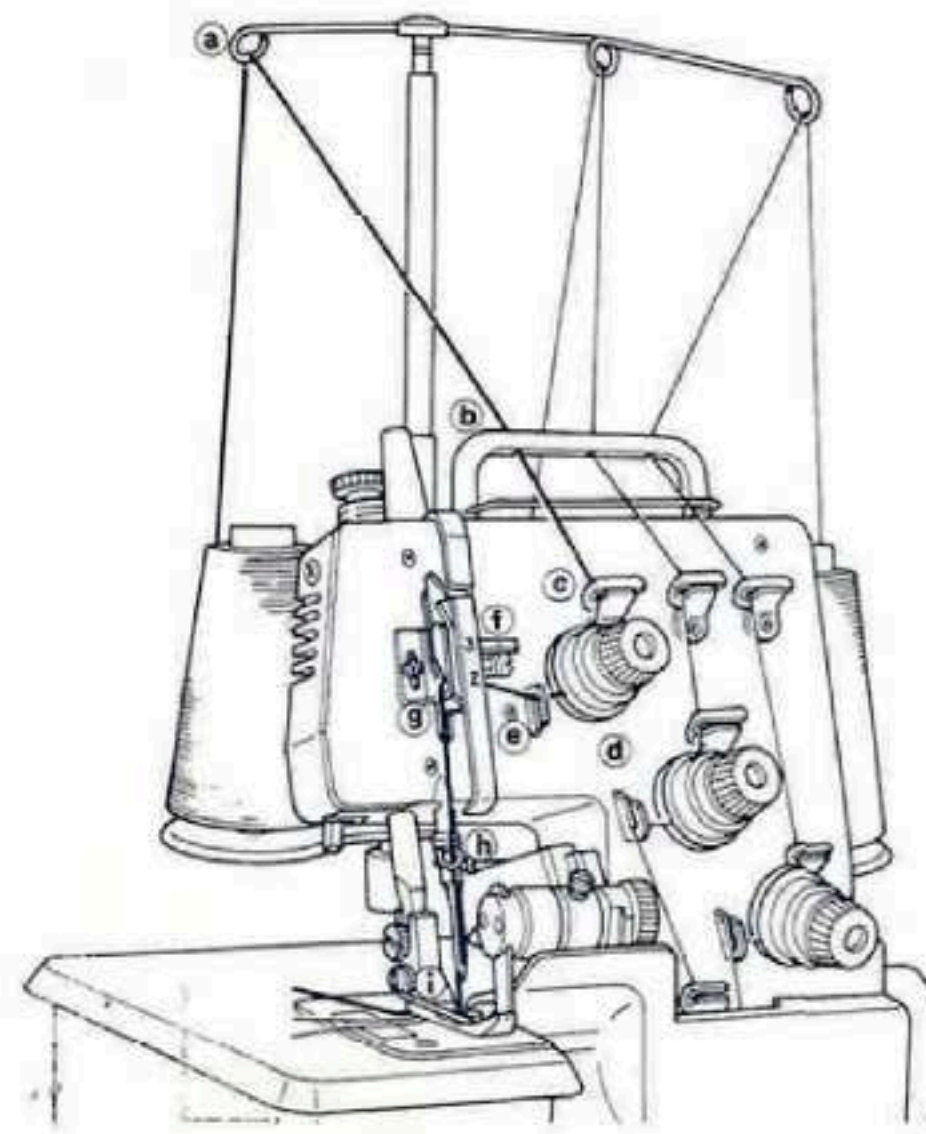

Figure 13

3 AVAILABLE SETTINGS

Throughout this manual you will find directions on how BABY LOCK recommends the machine be set-up for the described stitch. These are only guide lines for you to follow. With all the available settings, you may find you would like to make slight adjustments for different projects and/or different fabrics.

AVAILABLE SETTINGS

Stitch width	*Standard overedging*	2.5 mm ~ 5.3 mm
	Narrow rolled hemming	1.5 mm
Stitch length	1 mm through 5 mm	
Upper knife	Up or down position	
Thread guide switch	Blue "3" or Red "2"	
Needle plate	Regular or rolled hem position	
Subsidiary looper	Up or down position	
Tension dials	Within blue or red range	

When you prepare to set-up your machine to sew a garment, you should choose your settings in the ranges suggested by the BABY LOCK MANUAL, and later you can experiment with the available settings.

4 STANDARD MACHINE SETTINGS CHECK LIST

	3-thread seams	3-thread Narrow Rolled Hemming	2-thread overedging or decorative sewing	2-thread Narrow Rolled Hemming
Stitch width	2.5 mm ~ 5.3 mm	'M' line	2.5 mm ~ 5.3 mm	'M' line
Stitch length	3 mm	1 mm	3 mm	1 mm
Upper knife	Down	Down	Up or down	Down
Thread guide switch	Blue '3'	Blue '3'	Red '2'	Red '2'
Needle plate	Regular	Narrow Rolled Hem position	Regular	Narrow Rolled Hem position
Subsidiary looper	Up	Up	Down	Down
Tension dials	See page 8	See page 10	See page 13	See page 13

Note:

You may vary standard settings for stitch width, stitch length or tensions when desired to achieve a special effect.

5 STITCH LENGTH ADJUSTMENT

The BABY LOCK BL3-418 is pre-set at 3 mm stitch length for regular seaming and overedging. You may adjust your stitch length setting within the range of 1 mm ~ 5 mm according to the sewn fabrics and type of sewing. Normally, heavy weight fabrics is with long stitch length, light ones is with short stitch length.

1. Open side cover.
2. Turn handwheel clockwise by your right hand, pushing stitch length button (red) firmly until stitch length button fits in groove of stitch length dial.
3. While pushing stitch length button, turn handwheel to align the number indicator to the desired stitch length.
4. Cloth side cover.

NOTE:

Number 1 on stitch length dial is the shortest stitch, number 5 is the longest stitch.

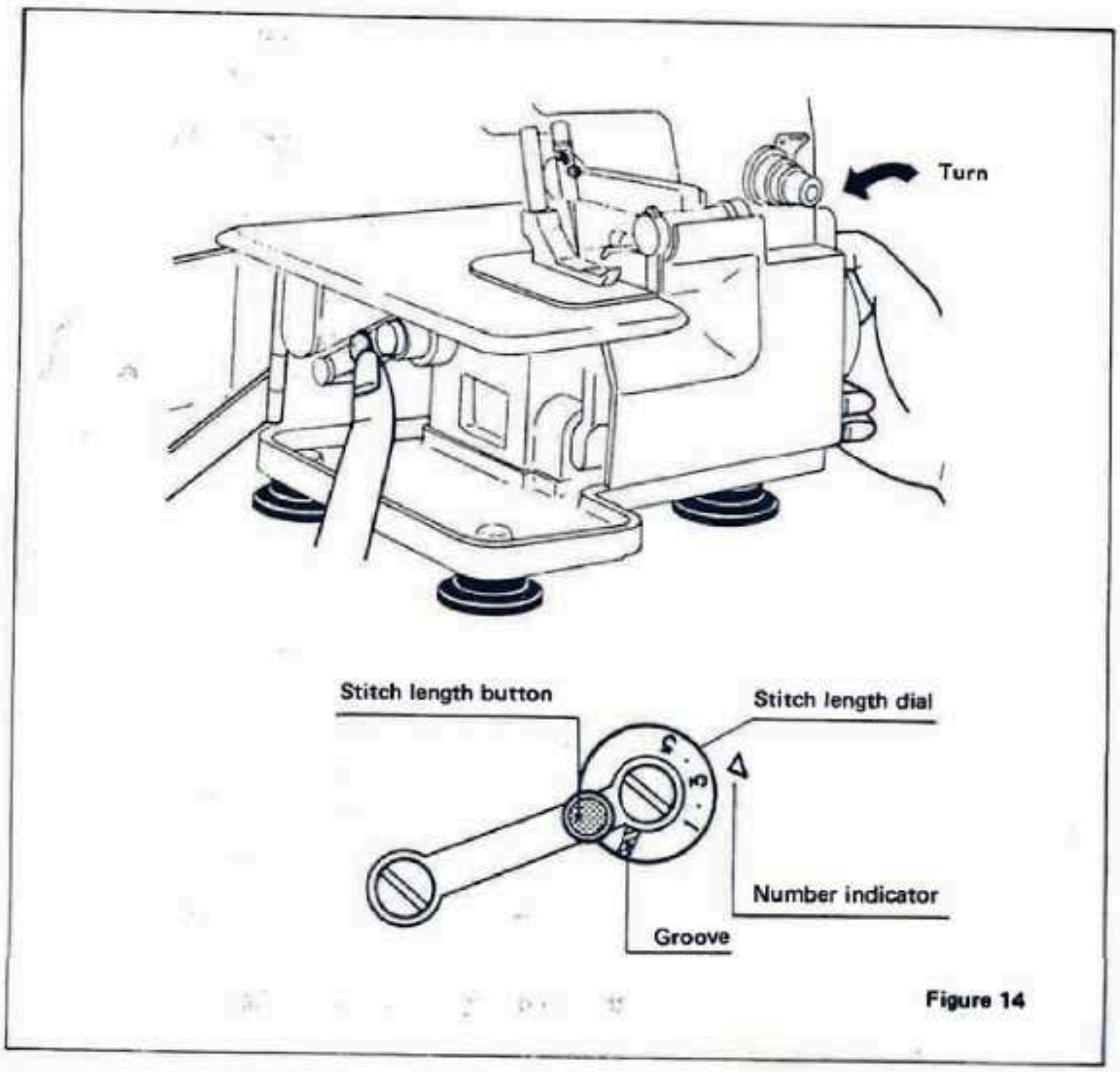

Figure 14

6 STITCH WIDTH ADJUSTMENT

The BABY LOCK BL3-418 is pre-set at 3.5 mm stitch width. You may adjust your stitch width settings within the range of 2.5 mm ~ 5.3 mm at regular seaming and overedging.

To adjust stitch widths

1. Open front cover.
2. Push the upper knife holder to the right and turn the knife to the "up" position (Figure 15):
3. Raise the presser foot.
4. Turn the stitch width adjusting dial and align the stitch width yellow indicator line to the desired stitch width line (Figure 16).
5. Lower the upper knife.
6. Lower the presser foot.
7. Close front cover.

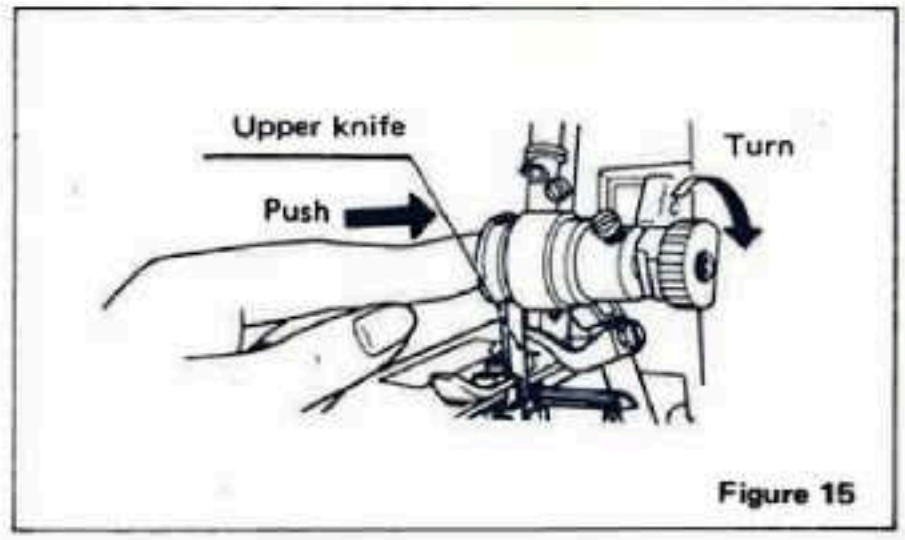

Figure 15

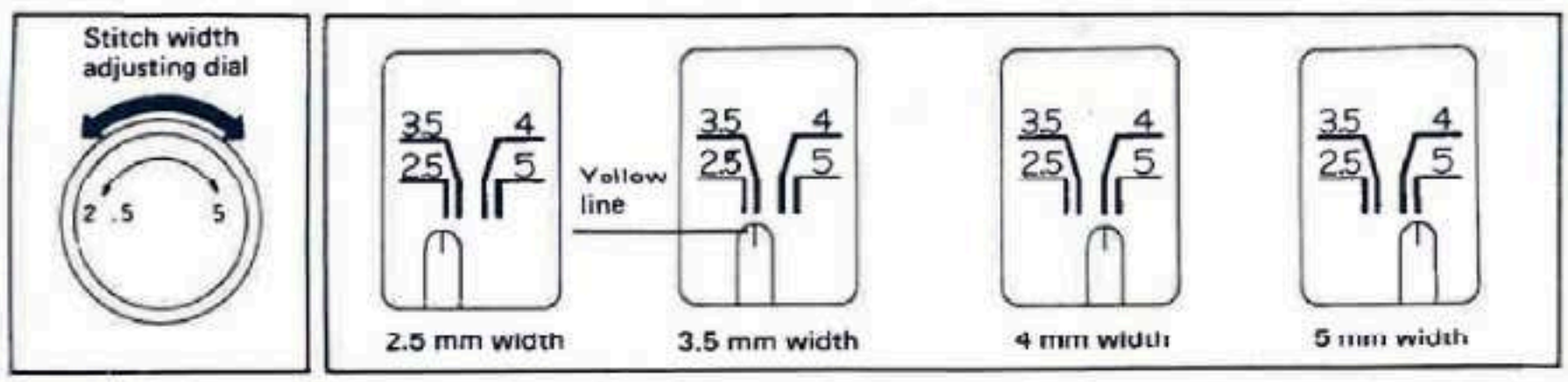

Figure 16

Note:

A width of 5.3 mm is obtained when you turn the yellow line of indicator to the far right.

7 TENSION ADJUSTMENTS FOR 3-THREAD SEAMS

Set-up machine for 3-thread seaming and overedging (Page 5).

The bottom edge of each thread tension adjuster knob should be aligned within the blue strip on the adjuster dial cover. Setting may vary slightly within this range. See figures 18 ~ 21 for perfect seam and adjustments for unbalanced tensions.

Note:

Adjustments will vary slightly according to the fabric to be sewn and the threads and needles used. Test sew on selected fabric and adjust tensions until desired effect is achieved.

Figure 17

Perfect Seam

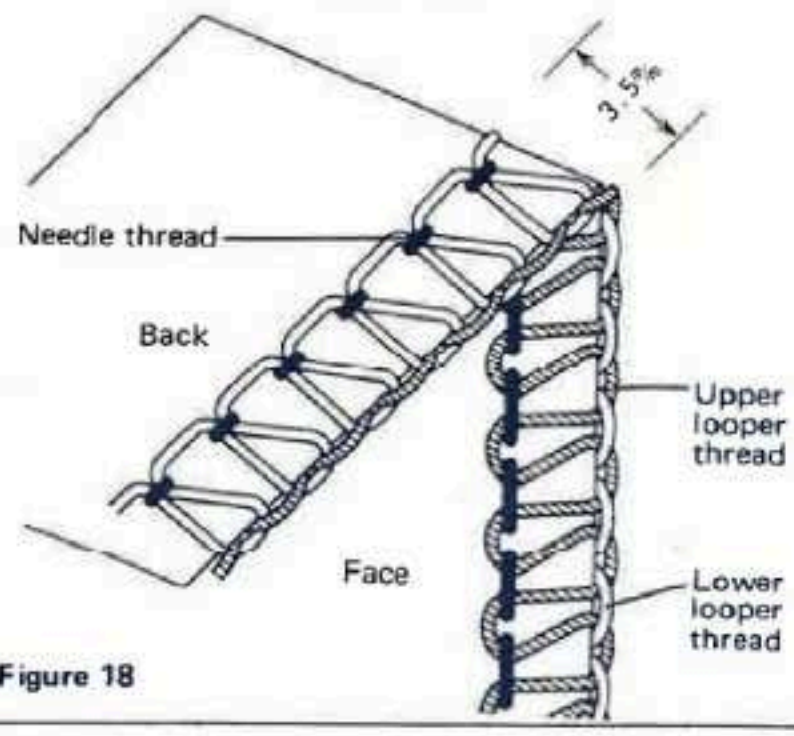

Figure 18

Unbalanced
Needle thread too loose

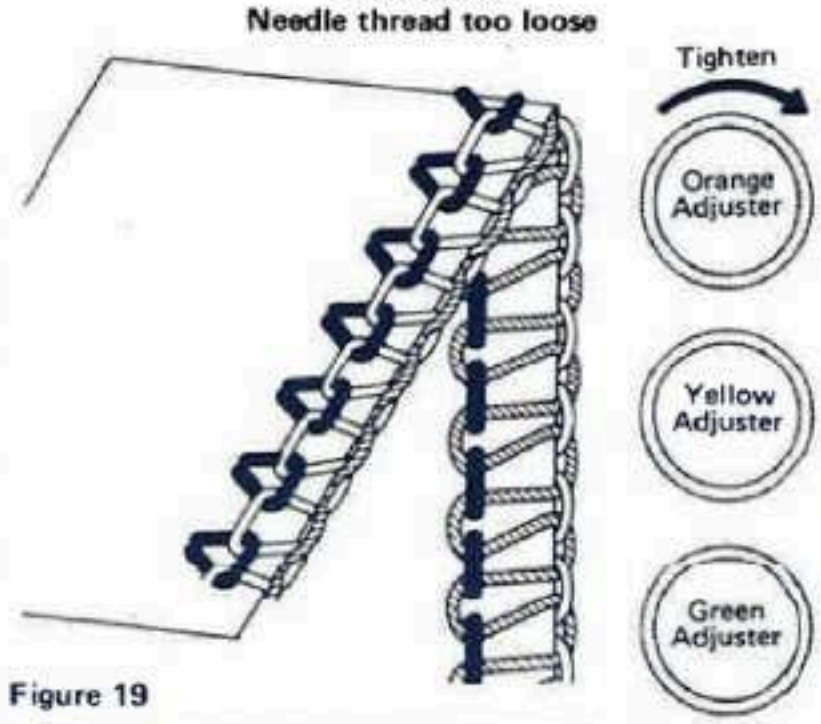

Figure 19

Unbalanced
Upper looper thread laps round over the back

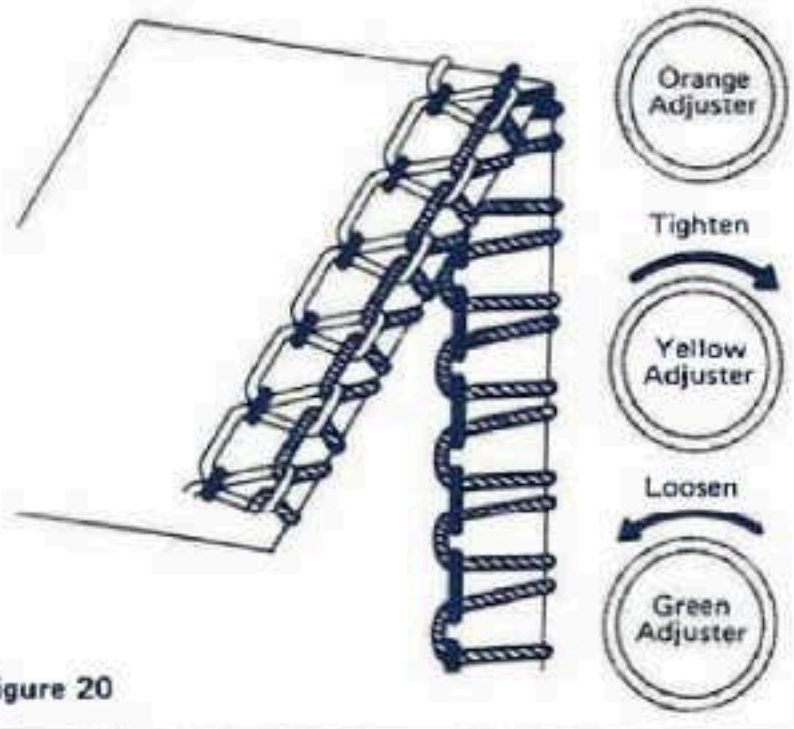

Figure 20

Unbalanced
Lower looper thread laps round over the face

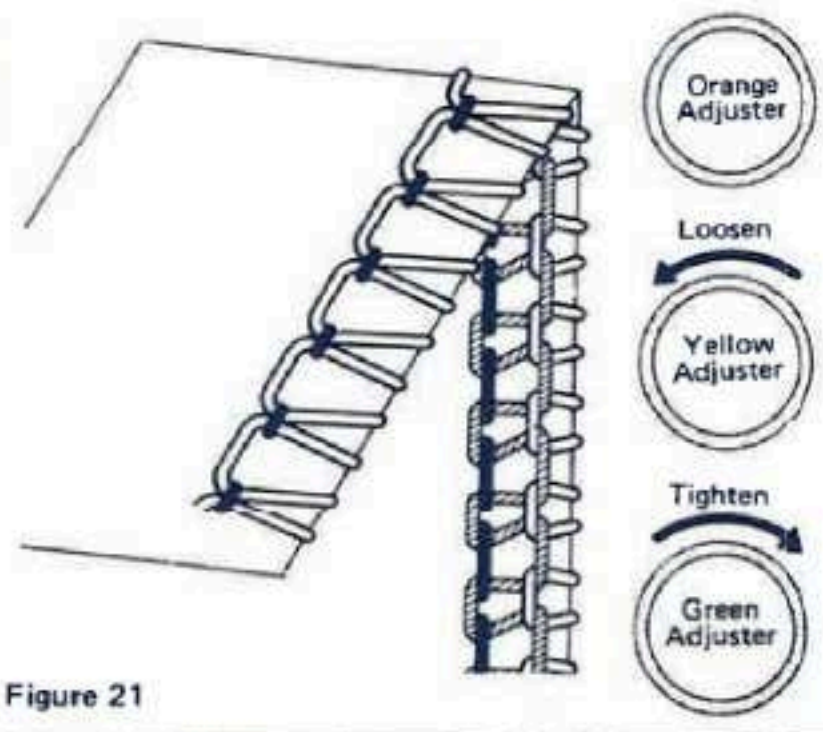

Figure 21

8 NARROW ROLLED HEMMING

1. Open both front and side covers.
2. Turn the handwheel clockwise to bring the needle to the highest position.
3. Lift the presser foot.
4. Gently pull to remove the chain-thread from the stitch fingers
5. Push the upper knife holder with finger and turn the knife holder knob clockwise to bring the knife to "up" position (See Figure 15).
6. Now, lower the needle to the lowest position by turning the handwheel clockwise and match the STAR MARK on the handwheel to the ARROW MARK on the face of the machine (Figure 22).
7. Turn the stitch width adjusting dial to align the yellow indicator line to ★ MARK LINE on stitch width indicator window on needle plate (Figure 23).
8. Pull down on the adjustable tongue holder until it snaps into position at lowest point (Figure 24).
9. Turn the stitch width adjusting dial to align the yellow line indicator to the "M" line on the indicator window (Figure 25).
10. Return the upper knife to cutting position.
11. Lower presser foot.
12. Adjust the stitch length to 1 mm (See page 6).
13. Close both front and side covers.
14. Adjust the tensions for narrow rolled hemming. (See page 10).

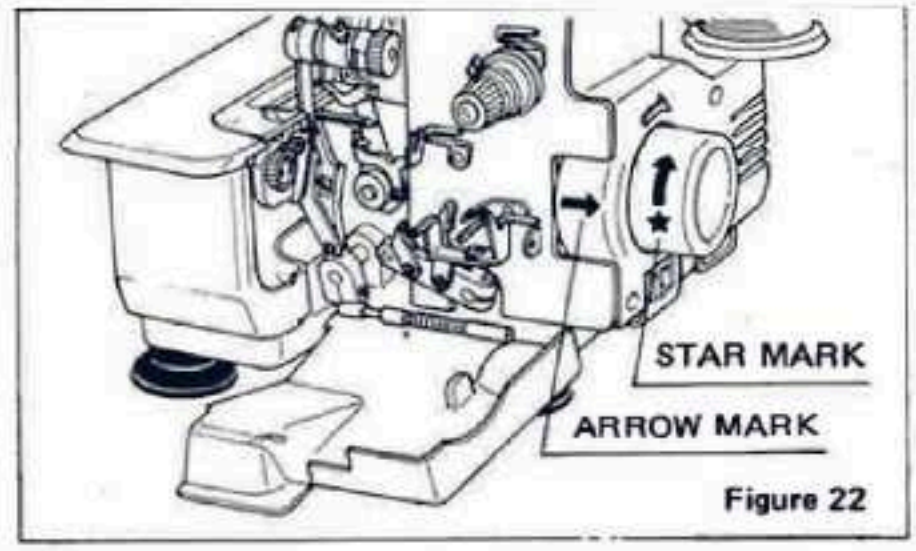

Figure 22

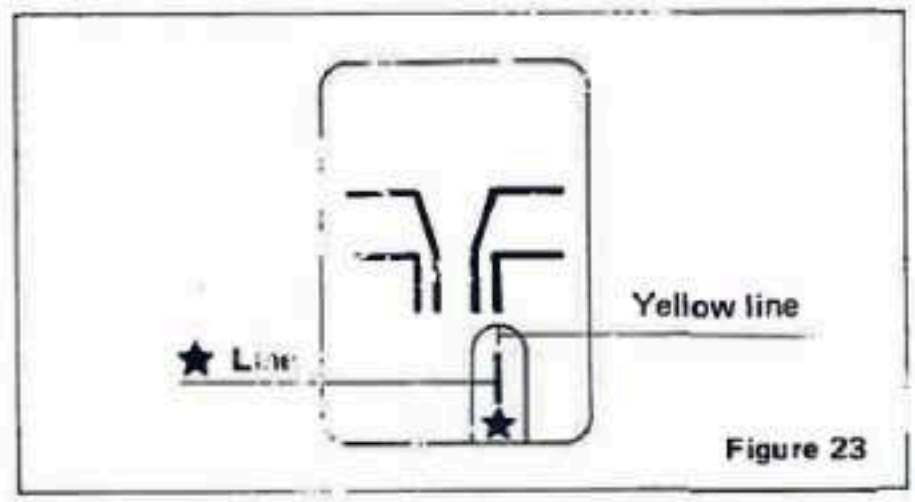

Figure 23

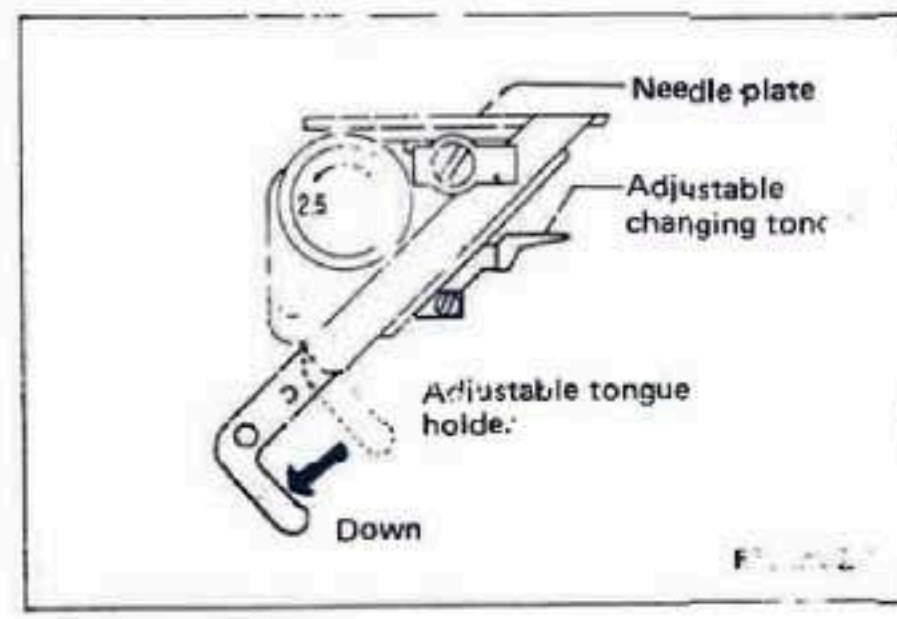

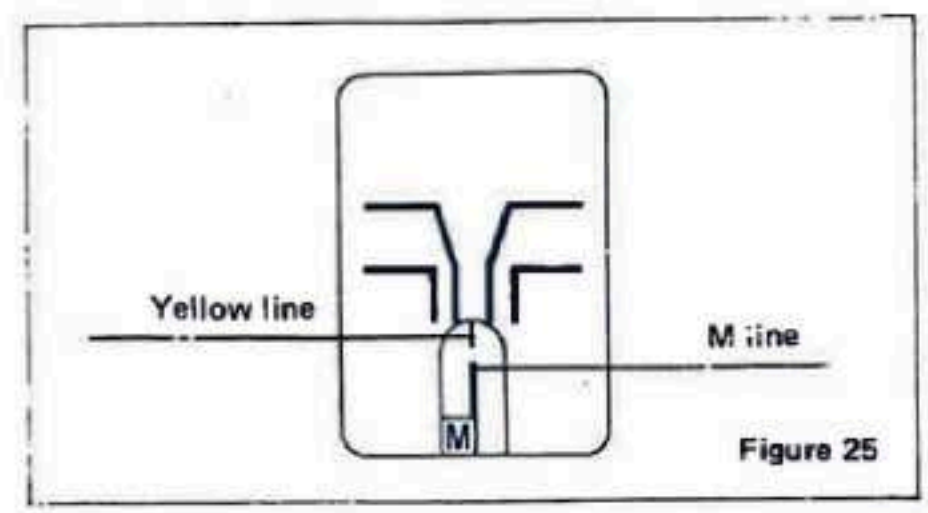

Figure 25

9 TENSION ADJUSTMENTS FOR NARROW ROLLED HEMMING

Set-up machine for narrow rolled hemming (See page 5).

In order to achieve a narrow rolled hemming, tension settings are deliberately unbalanced.

1. Tighten needle thread tension. (orange)
2. Loosen upper looper tension. (yellow)
3. Tighten lower looper tension. (green)

See figures for perfect seam and adjustments for rolled tensions. Test sew on selected fabric and adjust tensions until desired effect is achieved.

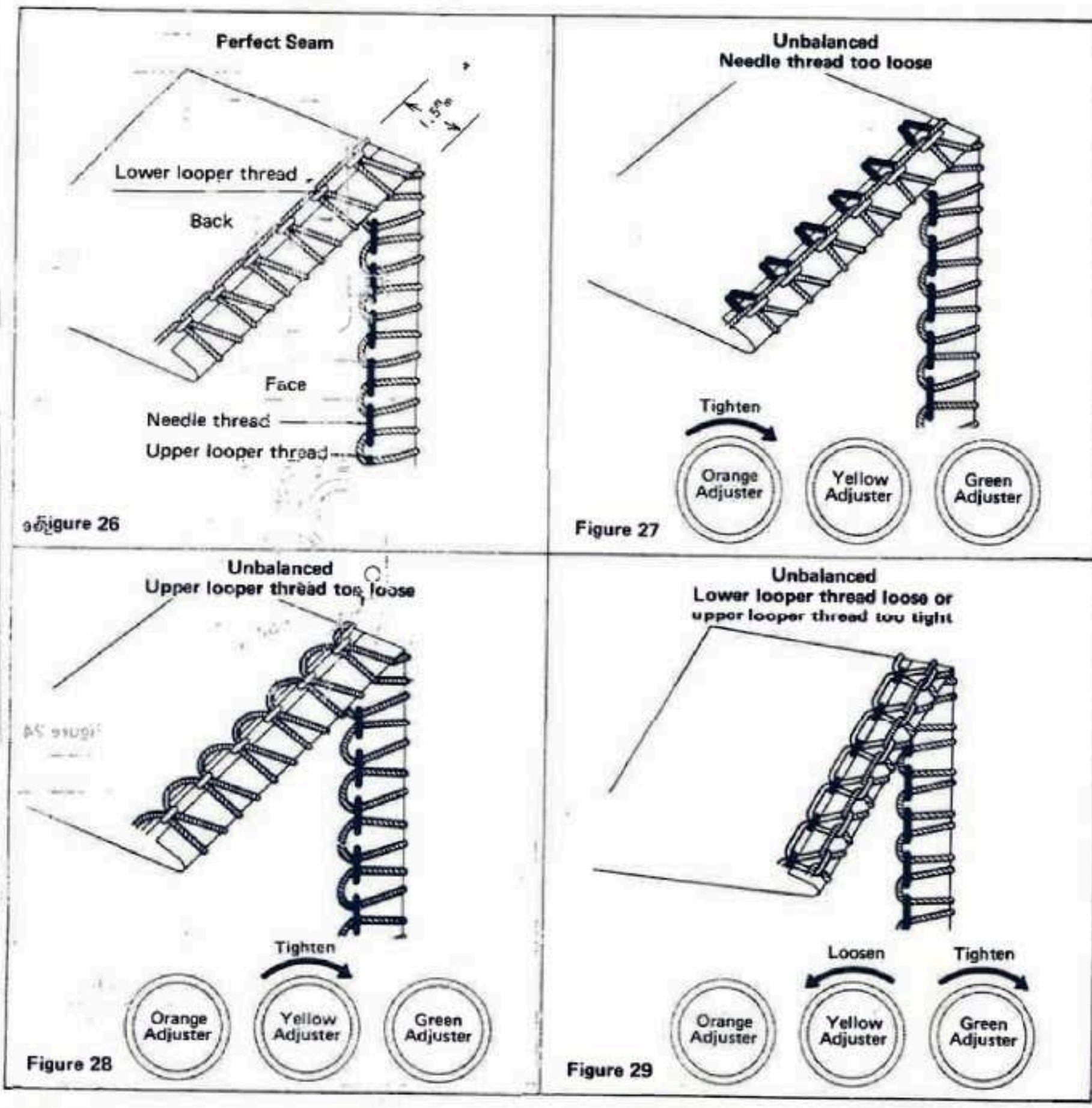

10 SWITCHING FROM NARROW ROLLED HEMMING TO 3-THREAD SEAMING

1. Open both front and side covers.
2. Turn the handwheel clockwise to bring the needle to the highest position.
3. Lift the presser foot.
4. Gently pull to remove the chain-thread from the stitch fingers.
5. Push the upper knife holder with finger and turn the knife holder knob clockwise to bring the knife to "up" position.
6. Lower the needle to the lowest position by turning the handwheel clockwise and match the STAR MARK on the handwheel to the ARROW MARK on the face of the machine (See Figure 22).
7. Turn the stitch width adjusting dial to align the yellow indicator line (Figure 23) to ★ MARK LINE on the window of the needle plate.
8. Push up on the adjustable tongue holder until it snaps into position and adjustable chaining tongue is level with the needle plate (Figure 30).
9. Turn the stitch width adjusting dial to align the yellow line indicator to your desired stitch width line (Figure 31).
10. Lower the upper knife to cutting position.
11. Lower presser foot.
12. Adjust stitch length to desired length.
13. Close both side and front covers.
14. Adjust tensions for standard 3-thread seams (See page 8).

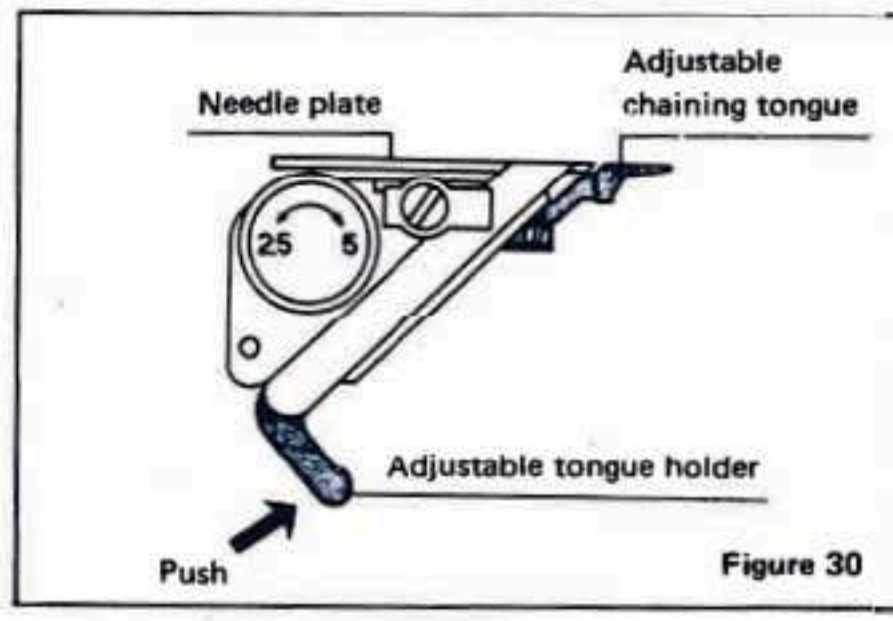

Figure 30

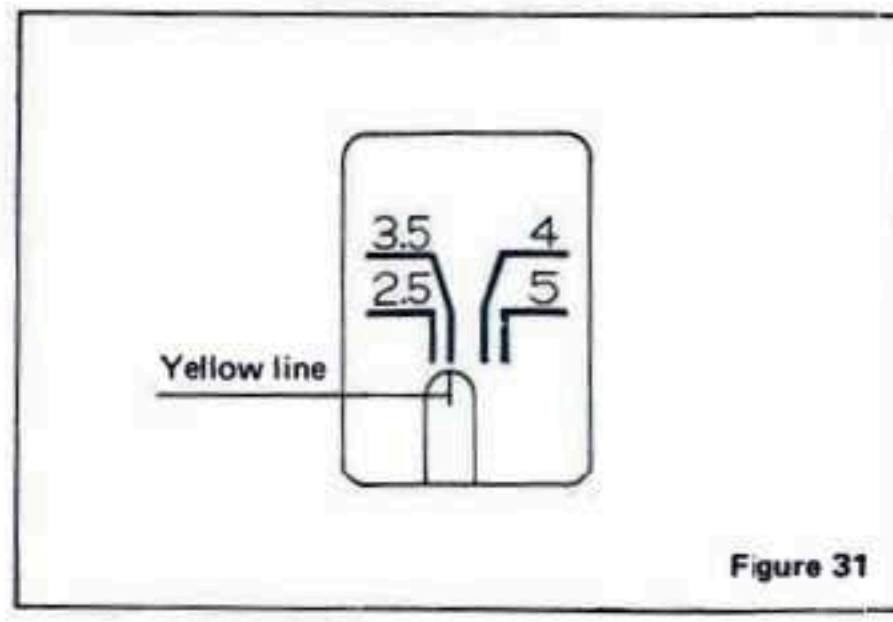

Figure 31

11 SWITCHING FROM 3-THREAD SEAMING TO 2-THREAD OVEREDGING

1. Open front cover.
2. Turn handwheel clockwise and lower needle to lowest position.
3. Cut upper looper thread (Figure 32). Either remove cut thread from all yellow thread guides and tension dial completely, or roll the thread back and around the upper looper tension dial (Figure 33).
4. Push on the subsidiary looper screw (brass) with your finger or screw-driver as you turn it to the left until the tip of the subsidiary looper fits into the eye of the looper (Figure 34).
5. Move the thread guide switch down from blue "3" to red "2" aligning the pink mark on switch with the red "2" (Figure 35).
6. Close front cover.
7. Lower the presser foot, hold on to thread tails, and sew to check for threads to chain.
8. Adjust tension for 2-thread overedging. (See page 13).
9. Test sew, making slight tension adjustments (if necessary) until perfect 2-thread overedge is achieved.
10. Stitch length may be adjusted for desired effect (See page 6).

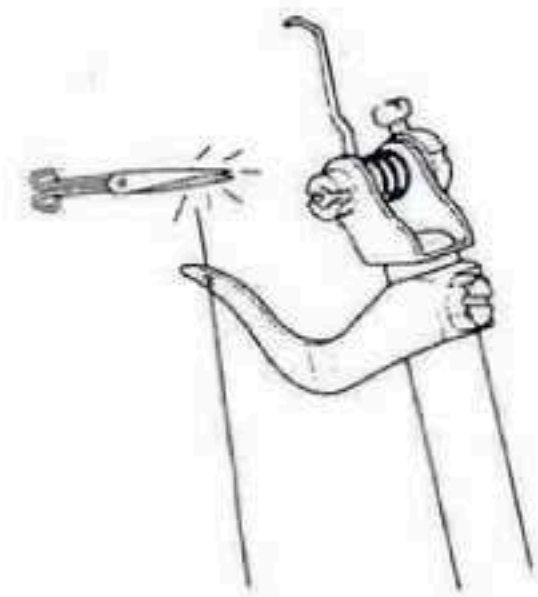

Figure 32

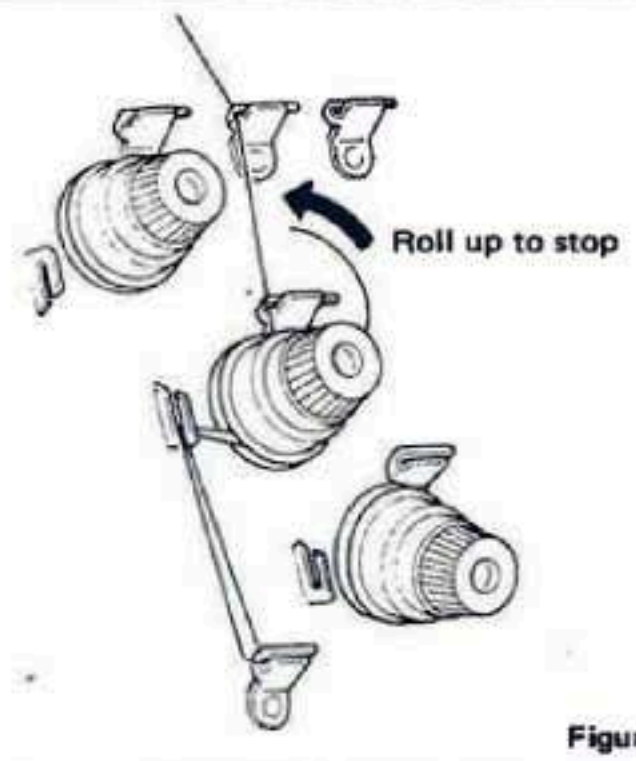

Figure 33

Thread guide switch

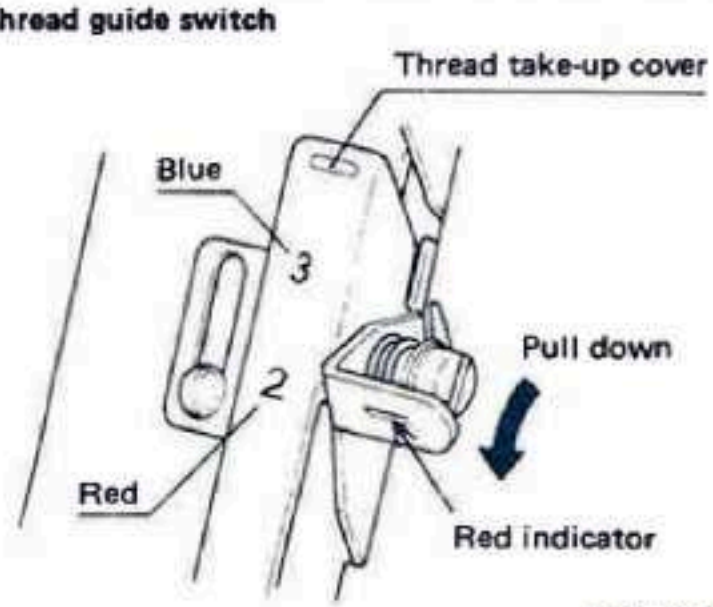

Figure 35

Subsidiary looper and upper looper

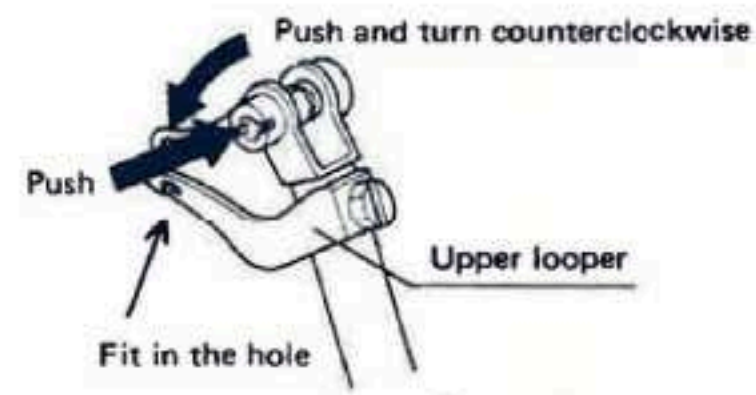

Figure 34

12 TENSION ADJUSTMENTS FOR 2-THREAD OVEREDGING

2-thread overedging

Set-up machine for 2-thread overedging (See page 5). The bottom edge of the needle thread tension adjuster knob (orange), and lower looper thread tension adjuster knob (green) should be aligned within the red strip on the adjuster dial cover. Settings may vary slightly within this range. See figures for perfect seam and adjustments for unbalanced tensions. Test sew on selected fabric and adjust tensions until desired effect is achieved.

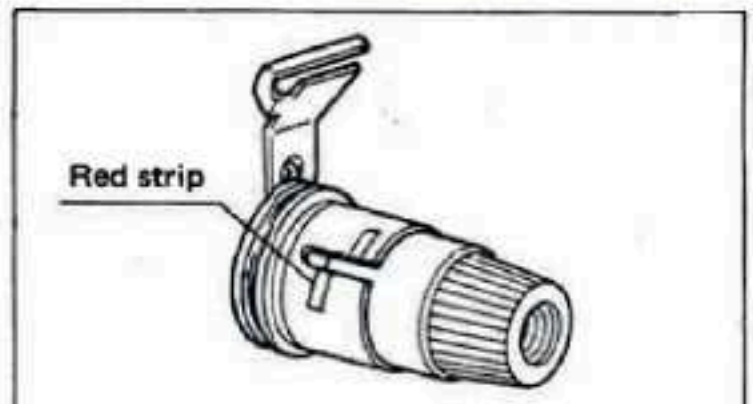

Figure 36

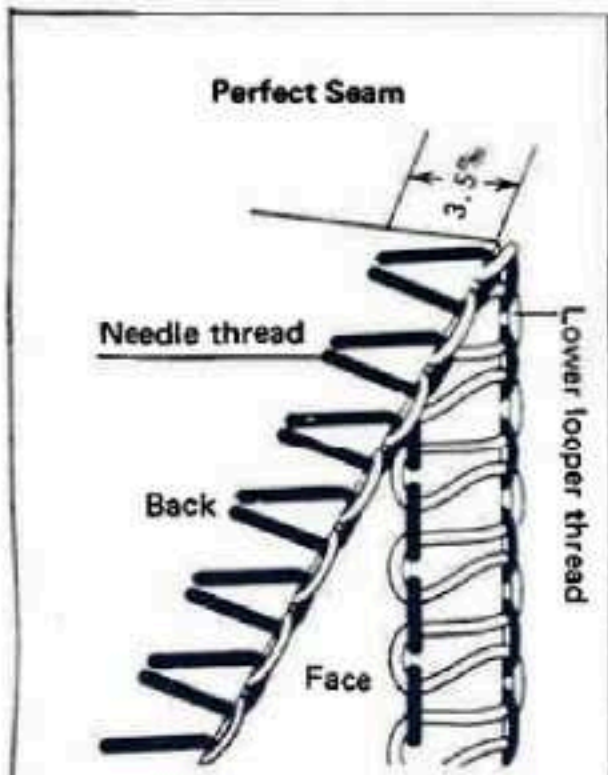

Figure 37

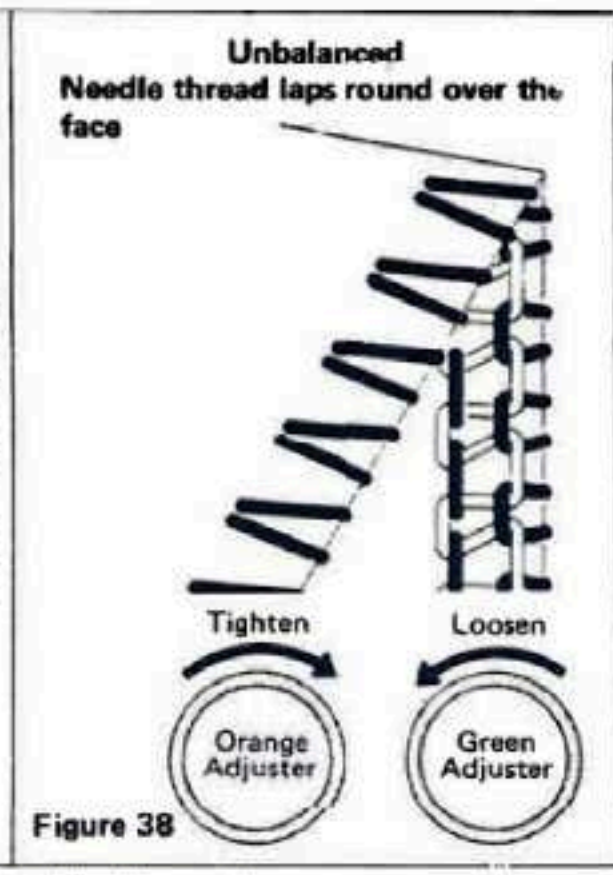

Figure 38

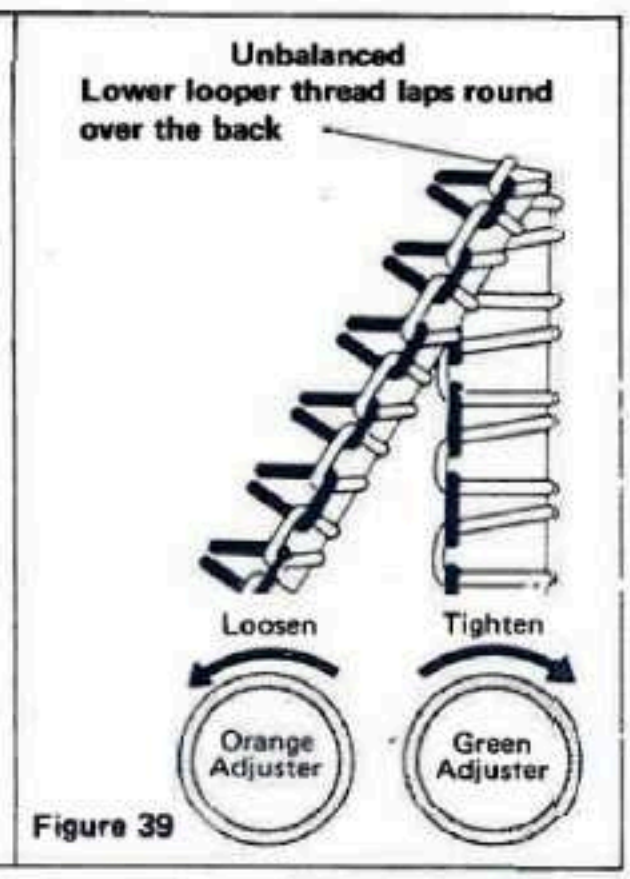

Figure 39

*** Adjustment for 2-thread narrow rolled hemming**

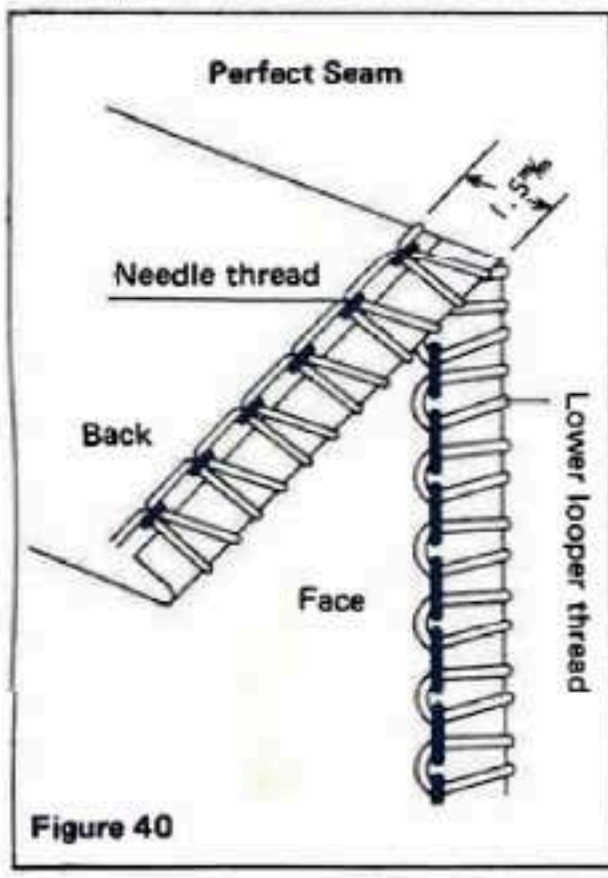

Figure 40

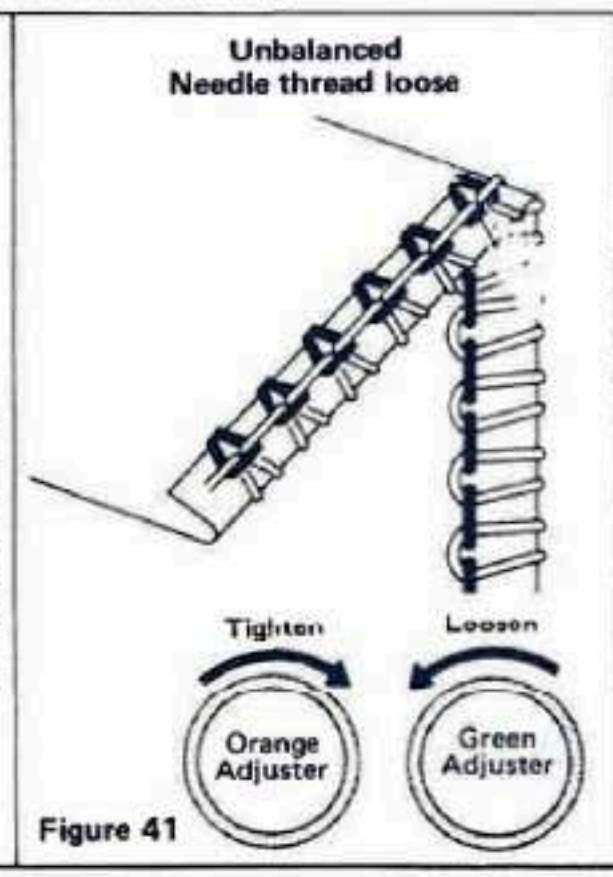

Figure 41

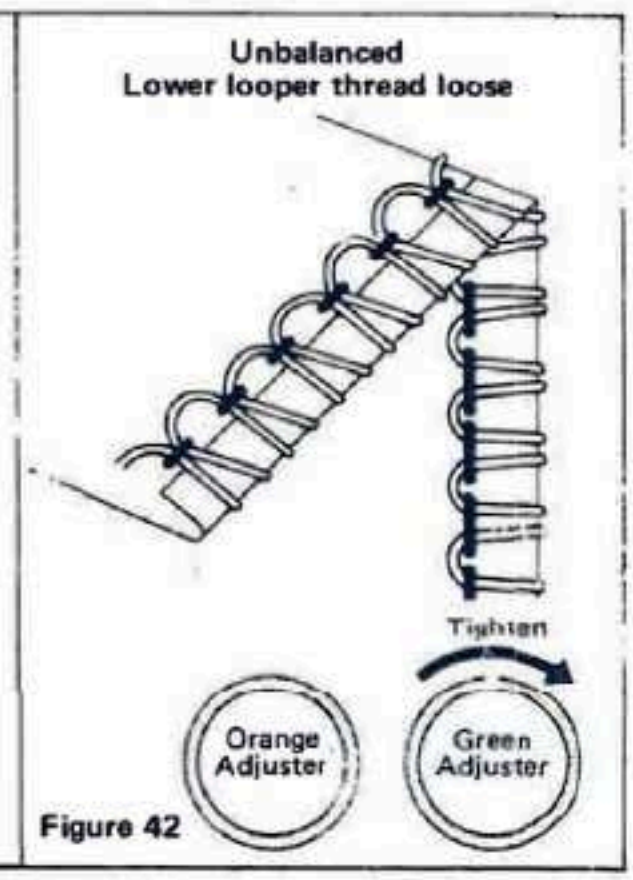

Figure 42

13 SWITCHING FROM 2-THREAD OVER-EDGING TO 3-THREAD SEAMING

1. Open front cover.
2. Turn handwheel clockwise and lower needle to the lowest position.
3. With a finger or screwdriver, push the brass screw to the back of the machine and turn clockwise to the "up" position (Figure 43).
4. Thread through yellow thread guides and eye of upper looper (front to back). Bring thread to back of machine and under presser foot.
5. Move the thread guide switch up from red "2" to blue "3" aligning pink mark on switch with the blue "3" (Figure 44).
6. Close the front cover.
7. Lower the presser foot and check for threads to chain.
8. Adjust tensions for 3-thread seaming (See page 8).
9. Test sew, making slight tension adjustments (if necessary) until perfect 3-thread seam is achieved.
10. Stitch length may be adjusted for desired effect (See page 6).

Subsidiary looper

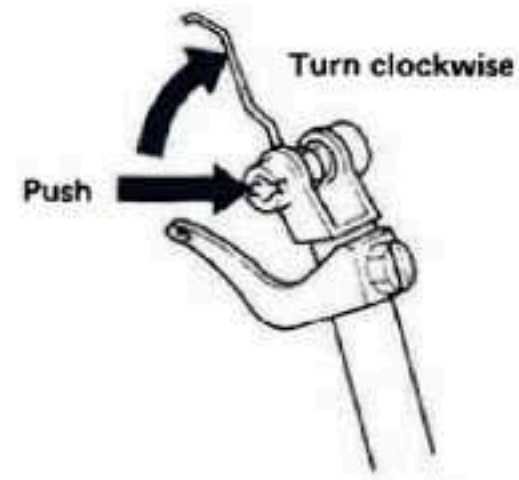

Figure 43

Thread guide switch

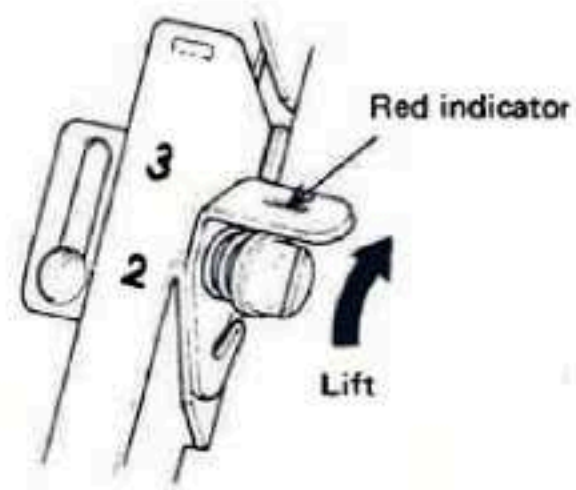

Figure 44

14 CHANGING NEEDLES

1. Turn the handwheel clockwise to bring the needle to the highest position.
2. Loosen the needle clamp screw and remove the old needle.
3. Put the point of the new needle in the hole of the needle plate, and the around end of the needle into the needle bar hole all the way to the top (Figure 45).
4. When inserting the needle, be sure to have the long thread guide groove facing the front. Do not mistake the thread guide groove of the needle for the hollow of the needle (See Figure 46).
5. Tighten the needle clamp screw firmly while holding the needle in correct position with your tweezers.

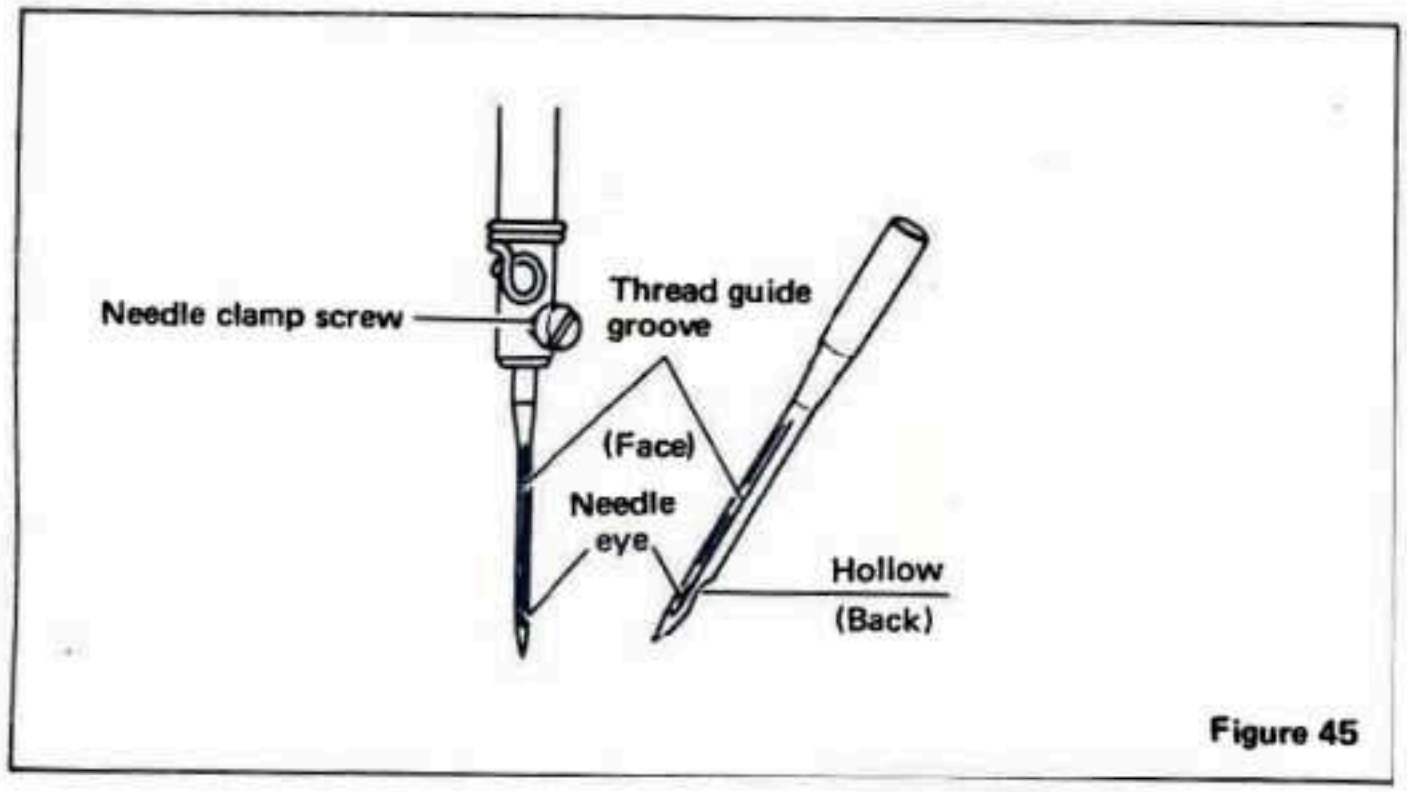

Figure 45

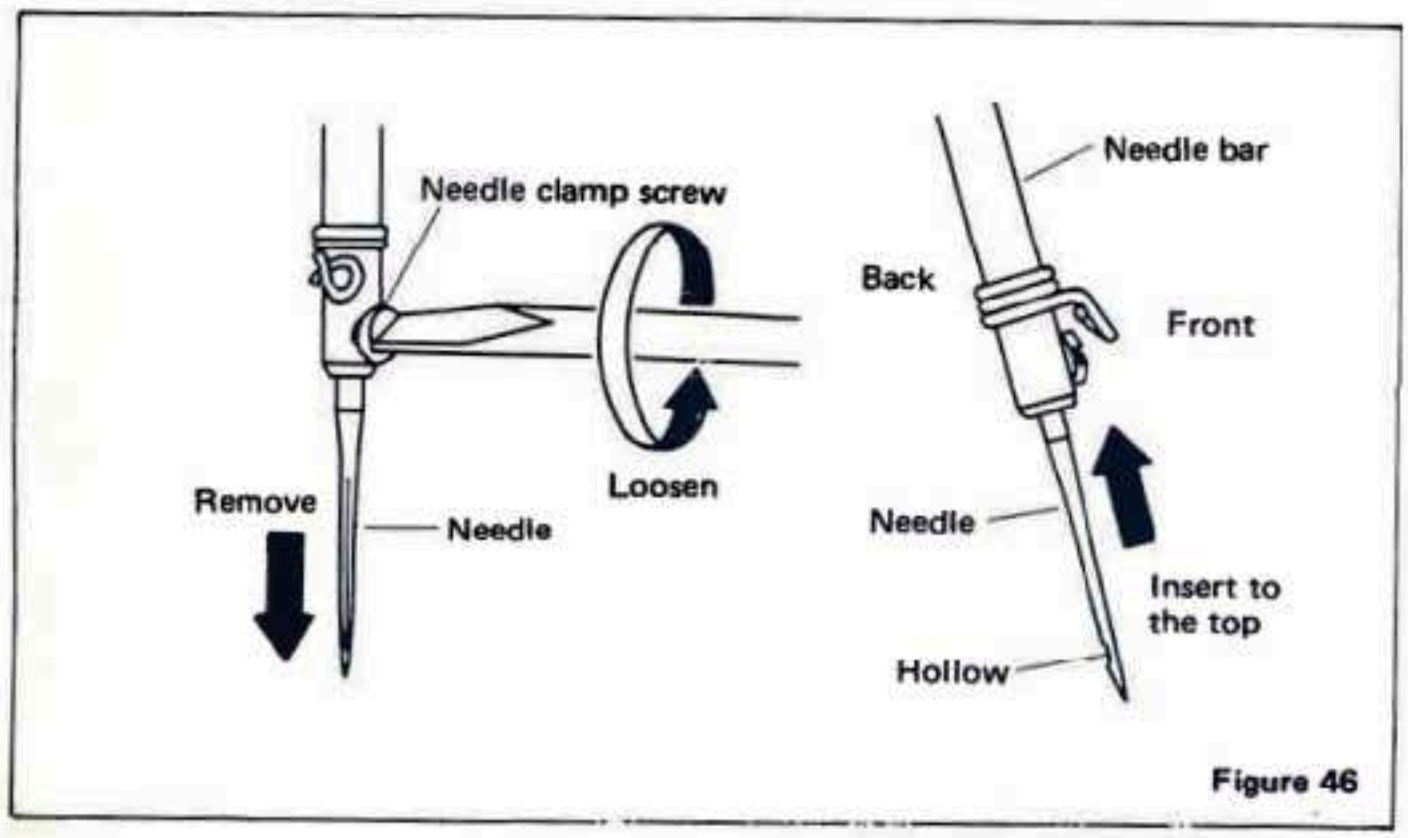

Figure 46

15 KNIVES

The knives on a serging machine are one of the most important parts of the machine. Care for them the same as you would a fine pair of scissors.

Using the cutting knives is an optional feature on the machine. There are some applications where you would not want to cut the fabric, and would want to disengage the upper knife.

The BABY LOCK serger has a special upper knife adjustment for sewing and cutting extra heavy fabrics.

Note:

DO NOT sew over pins with your BABY LOCK serger. Knives will be damaged if forced to cut through a pin. Garment seams may be pinned together but, remove the pins before they reach the knives.

15-1 Disengaging the upper knife

1. Open front cover.
2. Push on the upper knife holder with a finger of the left hand, and turn the knife holder knob with the fingers of the right hand, clockwise, until the knife tip raises to the highest position (Figure 47).

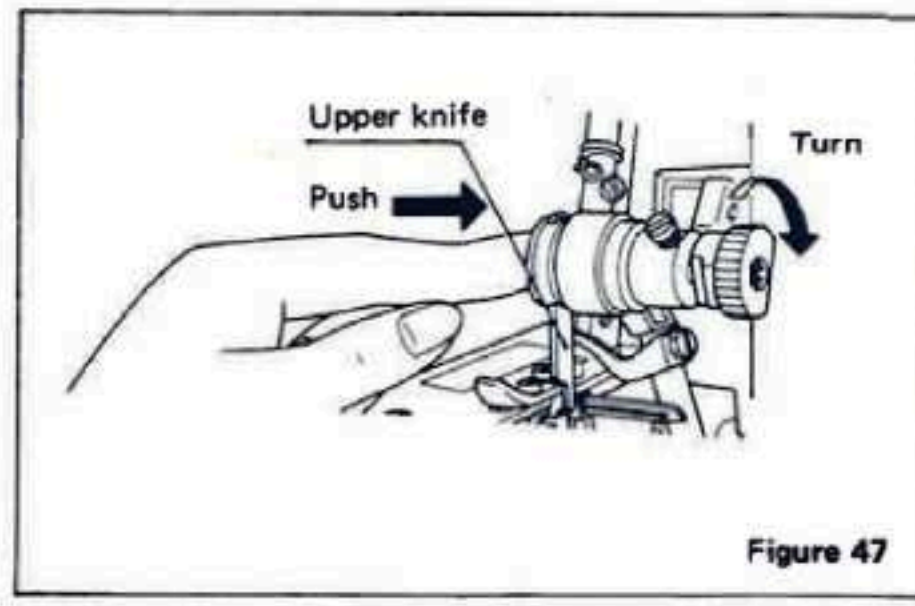

Figure 47

15-2 Locking the knife to sew extra heavy fabrics

1. Check to see that the knives are in the proper cutting position (See page 17).
2. Tighten the upper knife holder fixing screw (Figure 48).
3. When returning to normal sewing, "loosen" the upper knife holder fixing screw to unlock the knife.

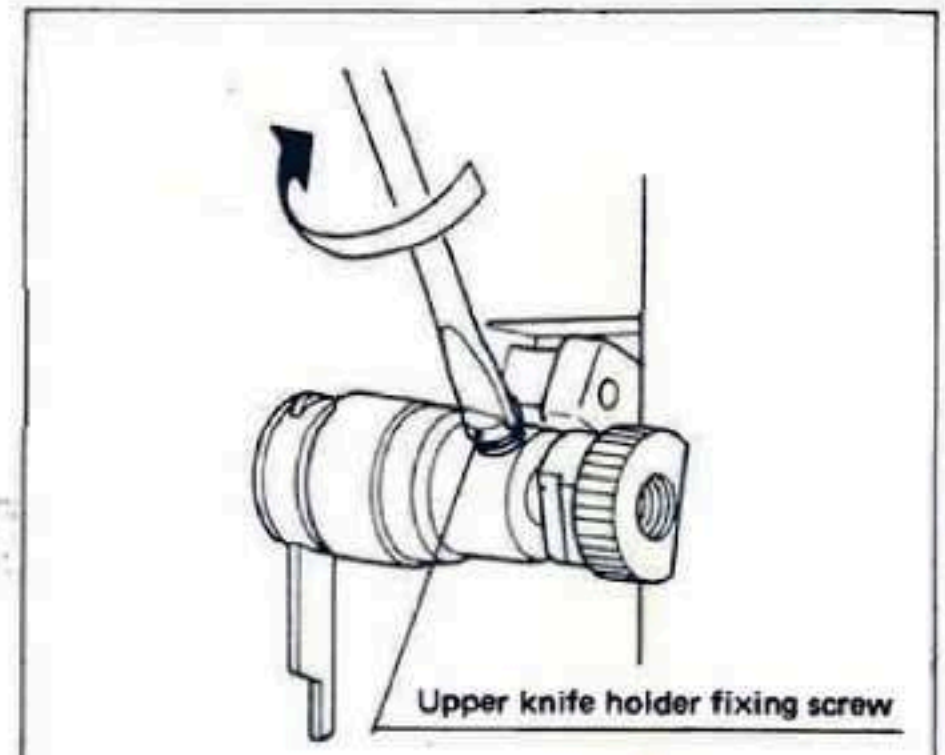

Figure 48

16 REPLACING THE KNIVES

The upper knife is made of a special long lasting steel and will not have to be replaced often. The lower knife is made of softer steel and will have to be replaced periodically.

16-1 Replacing the upper knife

1. Open front cover.
2. Turn the handwheel to bring the upper knife to its lowest position.
3. With right hand loosen the upper knife clamp screw and remove the upper knife from slot at the top of the holder (Figure 49).
4. Insert the new upper knife into the slot at the top of the holder.
5. Align upper knife so that it overlaps lower front cutting edge 1 mm (Figure 50).
6. Tighten upper knife clamp screw.
7. Turn the handwheel clockwise to check for proper alignment of knives.

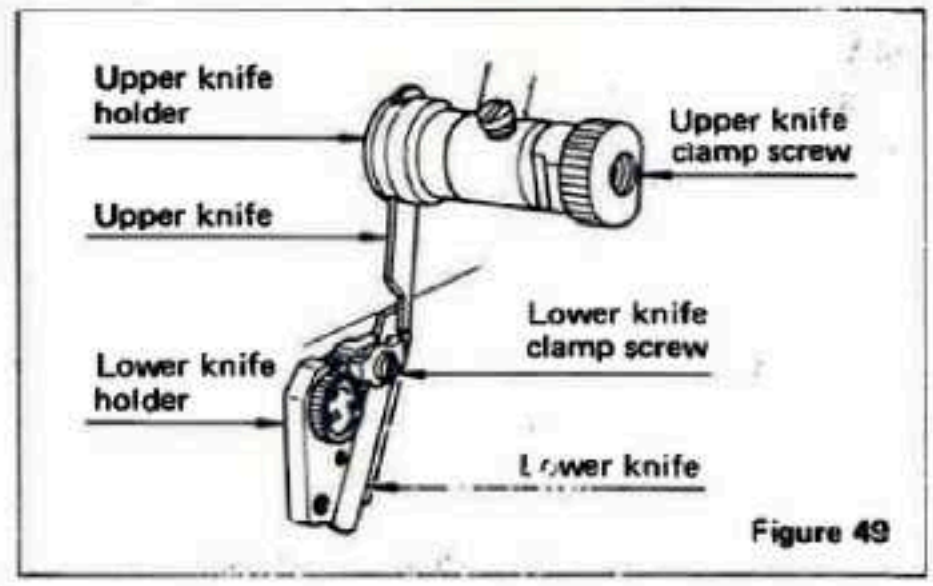

Figure 49

Figure showing upper knife at its lowest position.

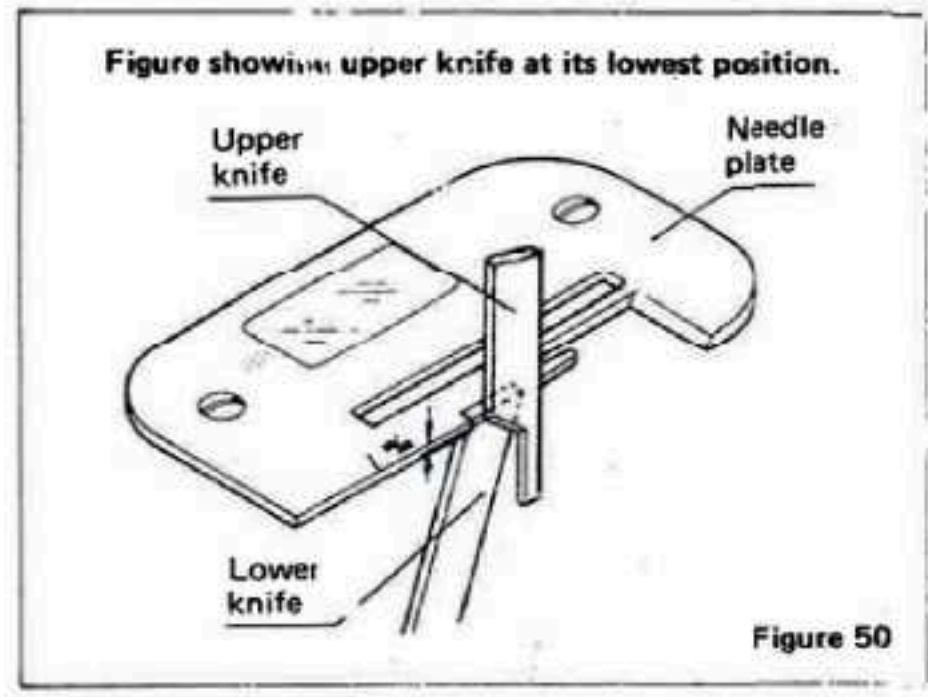

Figure 50

16-2 Replacing the lower knife

1. Turn the upper knife to "up" position (See page 16).
2. Loosen the lower knife clamp screw counter-clockwise (Figure 51).
3. Hold the bottom of the lower knife and remove it from the holder.
4. Hold the lower edge of the new knife and insert it into the holder from the bottom. Align top of knife to groove and flush to top of needle plate (Figure 52).
5. Tighten the lower knife clamp screw.
6. Return upper knife to proper cutting position.

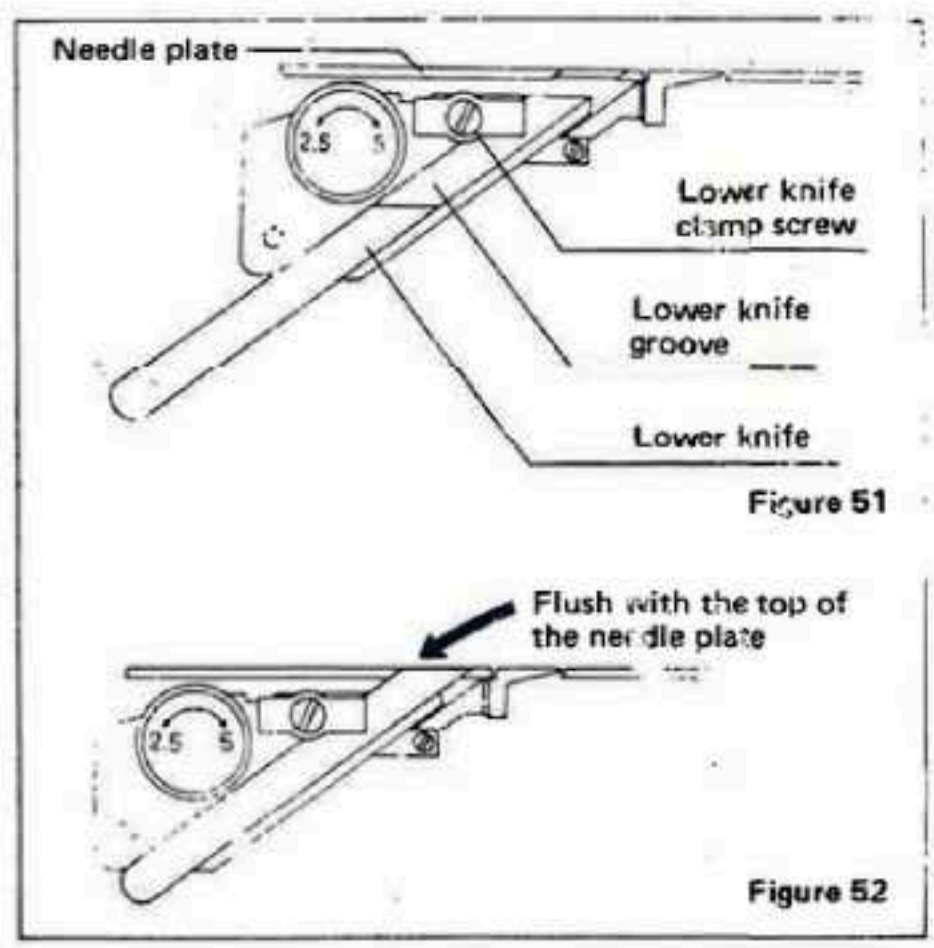

Figure 51

Figure 52

17 OILING OF MACHINE

Oiling your machine properly will increase its durability. The machine has four oil holes marked in red on the outside of the housing (Figure 53).

The large hole in the top of the machine needs 10 to 15 drops of oil. This is the central oiling system of the machine. Under the hole is a small oil reservoir that feeds oil to wicks which extend down to the major parts of the machine.

Place 1 to 2 drops of oil

1. In the two small holes on the machine cloth plate (red dot).
2. In the small hole on the upper knife holder arm (red dot).
3. On any "metal to metal" moving parts inside the front and side covers of machine. (Turn the handwheel clockwise to identify these parts.)
4. In the center of small black wheel (Figure 54). 1 or 2 drops
5. On needle bar, remove plastic needle bar cap (Figure 53).

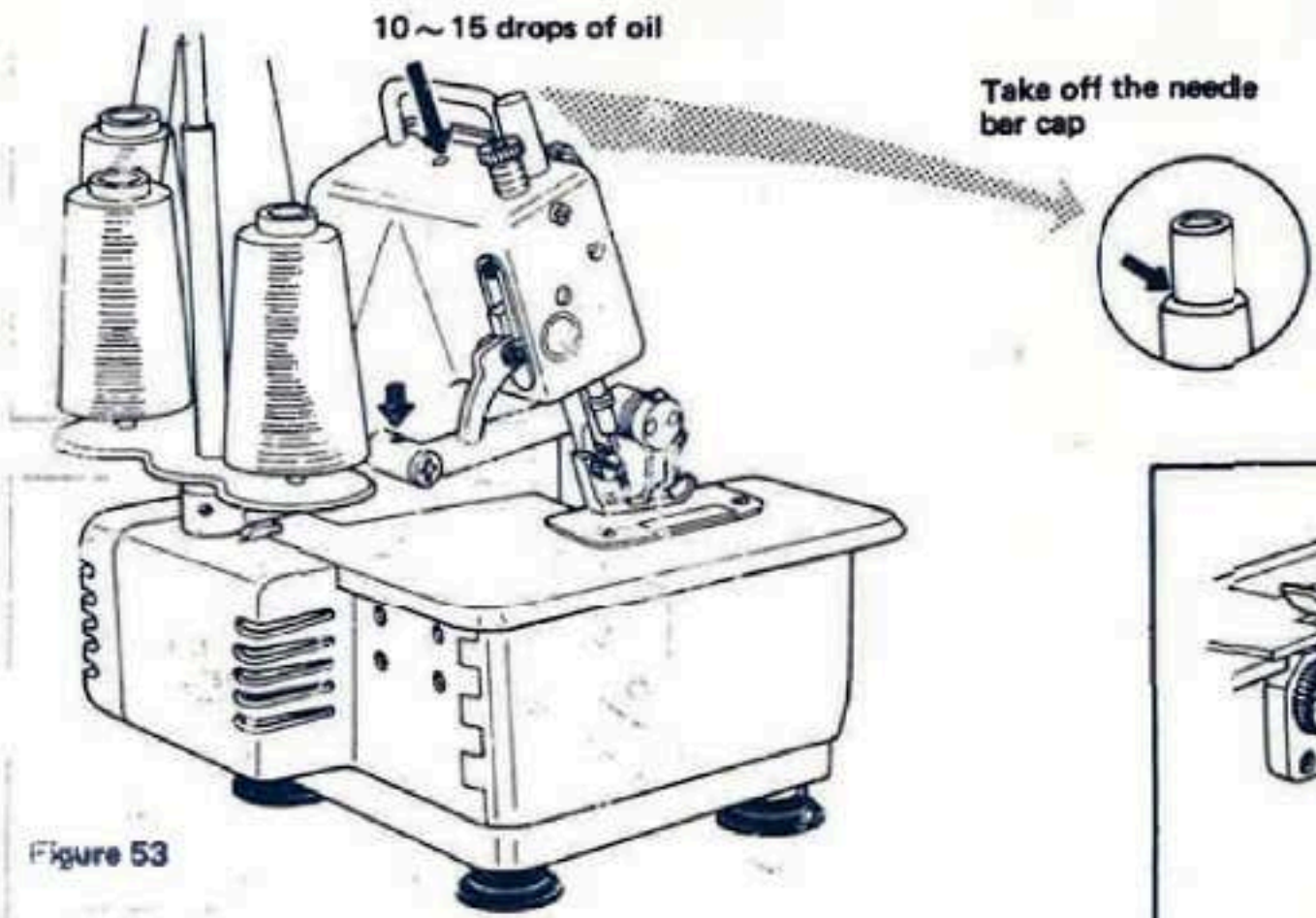

Figure 53

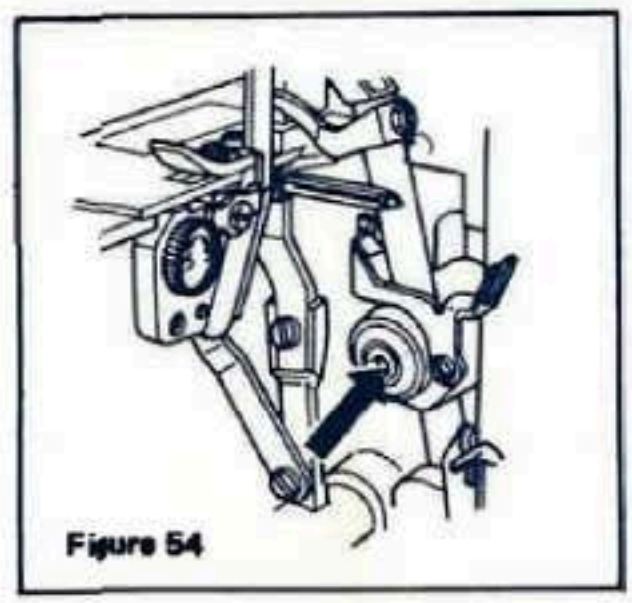

Figure 54

You should oil your machine after every 8 hour of operation (actual sewing time), or every 90 days.

18 PRESSER FOOT ADJUSTMENT

Pressure on the presser foot is pre-adjusted at the factory and very rarely needs adjustment. For very thin or very thick fabrics you might want to adjust the pressure slightly. Accordingly, sew thinner fabrics with less pressure and thicker fabrics with more pressure (Figure 55).

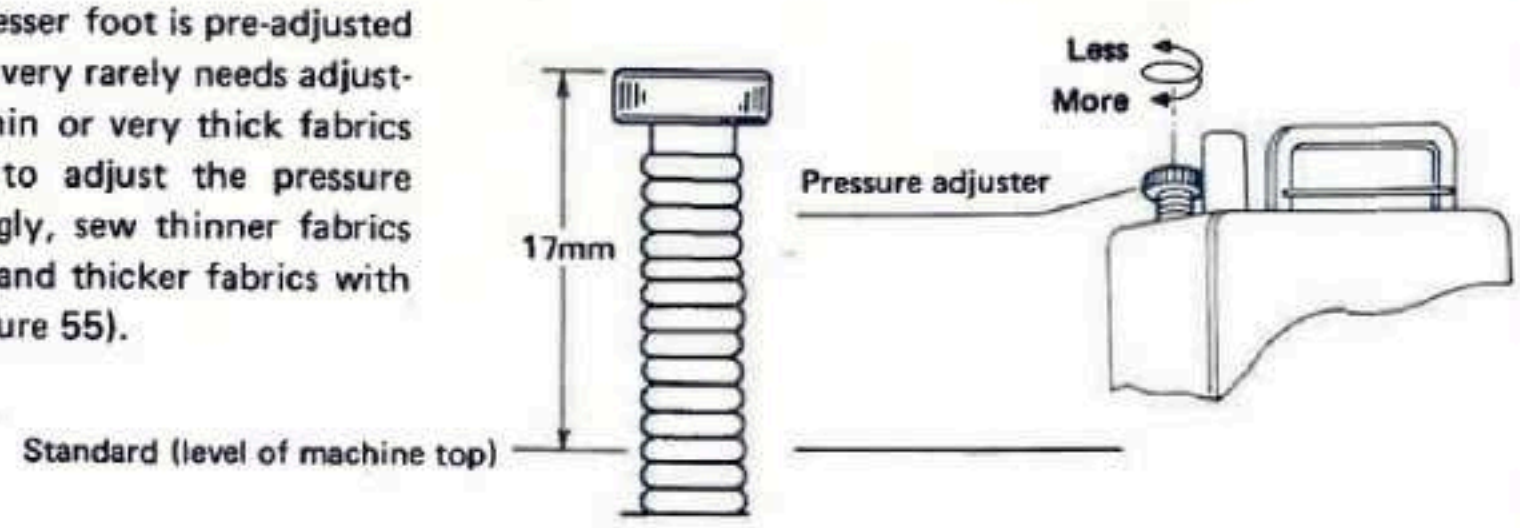

Figure 55

19 REPLACING THE LAMP

1. Remove lamp cover (Figure 56).
2. Replace with new lamp (Figure 57).

The consumption power of the lamp is 12V 6W.

Note:

DISCONNECT MACHINE FROM THE POWER SUPPLY BEFORE REPLACING THE LAMP.

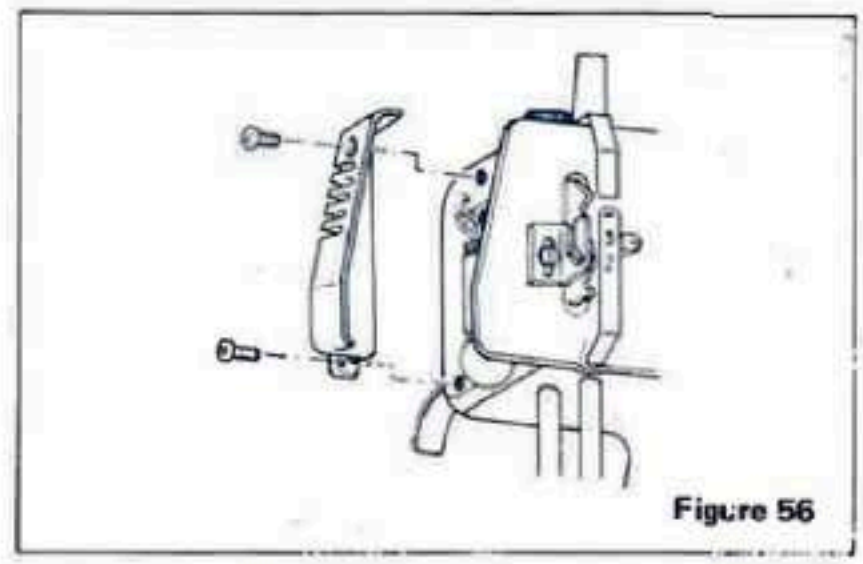

Figure 56

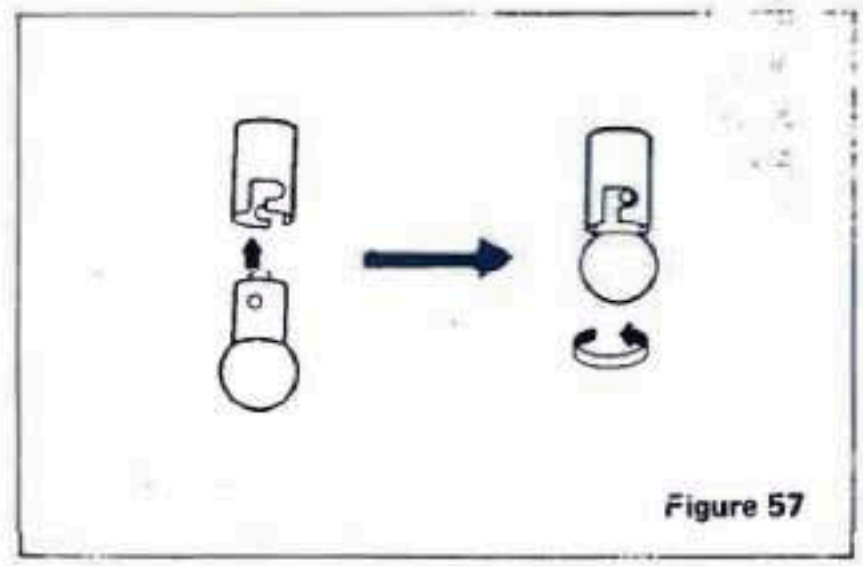

Figure 57

20 CHECKING AND ADJUSTMENT

The mechanical design of the machine is such that it requires very few basic adjustment. Before you call the service man, check the points below.

Trouble shooting guide

Trouble	Checking points	Page
Threads break—	a. Is the machine threaded correctly? b. Are the tensions adjusted properly? c. Is the needle bent? d. Is the needle corrct size? e. Is the needle inserted correctly?	3, 4 8, 10, 13 15
Skipped stitches occur—	a. Is the needle bent or tip worn? b. Is the needle inserted correctly? c. Is the machine threaded correctly? d. Is the pressure of the presser foot proper?	 15 3, 4 19
Seam is imbalanced—	a. Loose needle tension? b. Are all the tensions adjusted properly? c. Is the machine threaded correctly? d. Are you using the same weight and type of thread on loopers and needle?	 8, 10, 13 3, 4

21 SPECIFICATION AND PACKING LIST

Item	Specification
Stitch width	Standard overedging 2.5 mm~5.3 mm Narrow rolled hemming 1.5 mm
Stitch length	1 mm~5 mm
Needle bar stroke	25 mm
Knife stroke	6.5 mm
Presser foot lift	5 mm
Feed dog height	0.7 mm (standard)
Needle	DC x 1 #7~#14 or Schmetz 621 of corresponding sizes
Number of threads	3 or 2
Lubrication Method	Semi-automatic oil wick lubrication
Machine dimensions	250 mm x 250 mm x 280 mm
Machine weight	8kg (with motor)

Packing list

1. **Machine body**
2. **Motor**
3. **Controller set**
4. **Machine cover**
5. **Instruction booklet**
6. **Accessory**
   Screw-driver
   Bobbin supporter
   Needles
   Lower knife
   Tweezers
   Cleaning brush
   Oiler (capacity: 30 cc)
   Baby net

roll them

green - 2/2 - 2 5 turns to right

2 needle flat lock

Orange 3 -

5 turns to left

Printed in Japan Ⓔ

DIAGRAM FOR THREAD TENSION ADJUSTMENTS

This machine is already set-up each thread tension adjustments for 3-thread seaming and overeging. However when you change thread or fabric, please refer to diagram as below.

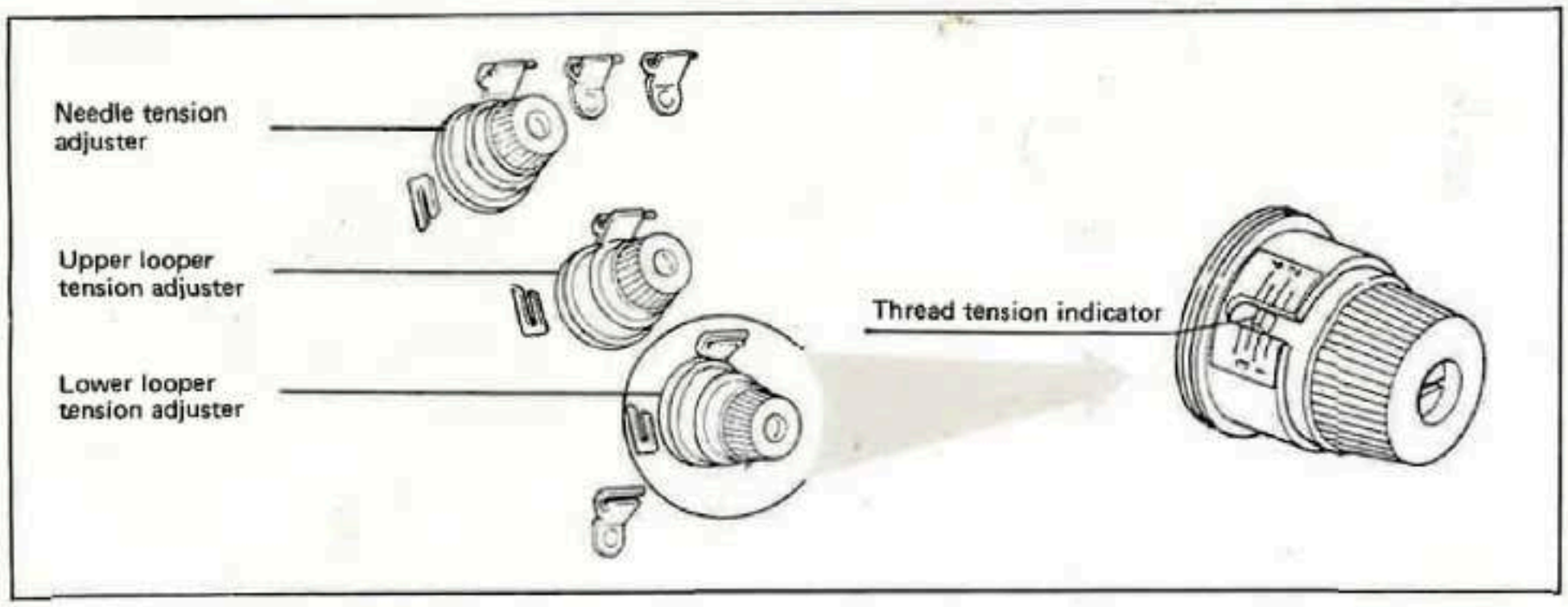

	Seaming	Fabric	Thread	Needle tension adjuster				Upper looper tension adjuster				Lower looper tension adjuster			
				1	2	3	4	1	2	3	4	1	2	3	4
3-thread	Ordinary overedging	Georgette	Tetron #80			■				■			■		
		Cotton (thin)	Spun #60			■				■			■		
		Denim	Spun #60			■				■			■		
	Narrow roll overedging	Cotton (thin)	Tetron #80 &Wooly nylon			■			■					■	
		Georgette	Tetron #80 & Wooly nylon			■			■					■	
	Blindhem	Cotton Jersey	Tetron #80 & Wooly nylon			■			■				■		
2-thread	Ordinary overedging	Cotton (thin)	Spun #60		■								■		
		Georgette	Tetron #80		■								■		
	Narrow roll overedging	Georgette	Tetron #80 & Wooly nylon			■							■		